HBK
HOTTINGER BRÜEL & KJÆR

ENGLISH

Operating Manual

MGC*plus*

HBM

Brüel & Kjær

Hottinger Brüel & Kjaer GmbH
Im Tiefen See 45
D-64293 Darmstadt
Tel. +49 6151 803-0
Fax +49 6151 803-9100
info@hbkworld.com
www.hbkworld.com

Mat.: 7-2002.0612
DVS: A00534 31 E00 08
02.2024

© Hottinger Brüel & Kjaer GmbH

Subject to modifications.
All product descriptions are for general information only. They are not to be understood as a guarantee of quality or durability.

TABLE OF CONTENTS

1 Safety instructions ... 9
1.1 Electromagnetic compatibility ... 12

2 Markings used ... 13
2.1 Markings on the device ... 13
2.2 The markings used in this document ... 13

3 Introduction ... 15
3.1 Degree of protection ... 15
3.2 Notes on documentation ... 16
3.3 System description ... 17
3.4 Layout of the MGCplus device ... 19
3.5 MGCplus housing designs ... 20
3.6 Possible amplifier/connection board combination ... 21
3.7 CP52 communication processor ... 24
3.7.1 Mounting ... 24
3.7.2 Status LED ... 27
3.8 Conditions at the place of installation ... 28
3.9 Maintenance and cleaning ... 29

4 Connection ... 31
4.1 Connecting the MGCplus in a tabletop housing/rack frame ... 31
4.1.1 Mains connection ... 31
4.1.2 Synchronization of multiple CP52 devices ... 32
4.1.2.1 Synchronization of multiple CP52 devices via a synchronization jack ... 32
4.1.2.2 Synchronization of multiple CP52 devices via Ethernet IEEE1588:2008 (PTPv2) ... 34
4.1.3 Synchronization of CP52 with CP42 ... 37
4.1.4 Synchronization of MGCplus with other HBM or PTPv2-compliant devices ... 38
4.2 Shielding design ... 39
4.3 Connecting the transducer ... 42
4.3.1 Connecting separate TEDS modules ... 42
4.3.2 SG full bridges, inductive full bridges ... 44

4.3.3 Full bridge circuits on AP810i/AP815i . . . 45
4.3.4 Strain gage half bridges, inductive half bridge circuits . . . 46
4.3.5 LVDT transducers . . . 47
4.3.6 Strain gage half bridges on AP810i . . . 48
4.3.7 Strain gage half bridges on AP815i . . . 49
4.3.8 Single strain gage . . . 50
4.3.8.1 Single strain gage on AP14 . . . 50
4.3.8.2 Single strain gage on AP814Bi . . . 51
4.3.8.3 Single strain gage on AP815i . . . 52
4.3.9 SG chains and strain gage rosettes on AP815i . . . 53
4.3.10 Torque flange (T10 serie, T12/T12HP, T40 serie) . . . 55
4.3.10.1 Torque measurement . . . 55
4.3.10.2 Rotational speed measurement (symmetrical signals) . . . 56
4.3.10.3 Rotational speed measurement (symmetrical signals) with reference pulse 57
4.3.11 Torque shaft (T4A, T5, TB1A) . . . 58
4.3.11.1 Torque measurement (slip rings or direct cable connection) . . . 58
4.3.12 Thermocouples . . . 59
4.3.13 DC voltage sources . . . 60
4.3.14 DC current sources . . . 67
4.3.15 Resistors, Pt100 . . . 69
4.3.16 Frequency measurement without directional signal . . . 70
4.3.17 Frequency measurement with directional signal . . . 71
4.3.18 Pulse counting, single-pole . . . 72
4.3.19 Pulse counting, differential . . . 73
4.3.20 Active piezoelectric transducers . . . 74
4.3.21 Piezoresistive transducers . . . 75
4.3.22 Potentiometric transducers . . . 76
4.3.23 Connection via the distributor board VT810/815i . . . 77
4.4 Connecting CANHEAD modules . . . 79
4.4.1 Communication card ML74B . . . 80
4.4.2 AP74 connection board . . . 81
4.5 Inputs and outputs, remote controls . . . 82
4.5.1 Inputs/outputs of the CP52 . . . 82
4.5.2 Analog output on the front panel . . . 84

4.5.3 Connection boards AP01i/AP03i/AP14/AP17 84
4.5.3.1 Socket assignment AP01i/AP03i/AP14/AP17 85
4.5.3.2 AP77 89
4.5.4 Inputs and outputs of AP75 90
4.5.5 Analog outputs on the AP78 92

5 Starting up 93
5.1 Devices in the desktop housing and rack frame 93

6 Functions and symbols of the AB22A 97
6.1 Control elements of the AB22A 97
6.2 Display 98
6.2.1 The first display 98
6.2.2 Display in measuring mode 99
6.2.3 Messages of AB22A/AB32 103
6.3 AB22A in Setup mode 103
6.3.1 Call menus 106
6.3.2 Exit menus 107
6.3.3 Channel selection in measuring mode 108
6.3.4 Channel selection in Setup mode 109
6.3.5 Saving settings 109
6.3.6 Drop-down menus 110
6.3.7 Setting elements in the setup windows 110

7 Measuring 115
7.1 General information 115
7.2 General principles for adjusting a measurement channel 116
7.2.1 Adapting to the transducer 118
7.2.1.1 Extended functions of the ML38B 119
7.2.2 TEDS transducers 120
7.2.3 Signal conditioning 122
7.2.4 Display 125
7.2.5 Analog outputs (single-channel modules only) 126
7.3 Adapting to the transducer 129
7.3.1 SG transducers 129

7.3.1.1 Direct entry of transducer characteristics . . . 130
7.3.1.2 Calibrating the characteristic curve of the transducer . . . 133
7.3.2 Strain gages . . . 134
7.3.2.1 Direct entry of transducer characteristics . . . 137
7.3.3 Inductive transducers . . . 139
7.3.3.1 Direct entry of transducer characteristics . . . 140
7.3.3.2 Calibrating the characteristic curve of the transducer . . . 142
7.3.4 Torque transducer . . . 145
7.3.4.1 Direct entry of torque characteristics . . . 146
7.3.4.2 Calibration with shunt installed . . . 148
7.3.5 Adjusting the rotational speed channel, frequency measurement . . . 152
7.3.6 Adjusting the rotational speed channel, power measurement . . . 155
7.3.7 Thermocouples . . . 157
7.3.7.1 Direct entry of transducer characteristics . . . 158
7.3.8 Current and voltage measurement . . . 159
7.3.8.1 Direct entry of transducer characteristics . . . 160
7.3.9 Resistance temperature sensors . . . 162
7.3.9.1 Direct entry of transducer characteristics . . . 163
7.3.10 Resistors . . . 165
7.3.10.1 Direct entry of transducer characteristics . . . 165
7.3.11 Pulse counting . . . 167
7.3.11.1 Direct entry of transducer characteristics . . . 168
7.4 Current-fed piezoelectric transducer . . . 172
7.4.1 Direct entry of transducer characteristics . . . 173
7.5 Piezoresistive transducers . . . 175
7.5.1 Direct entry of transducer characteristics . . . 175
7.5.1.1 Calibrating the characteristic curve of the transducer . . . 177
7.6 Potentiometric transducers . . . 179
7.6.1 Direct entry of transducer characteristics . . . 180
7.6.1.1 Calibrating the characteristic curve of the transducer . . . 182

8 Additional functions . . . 185
8.1 Remote control (single-channel modules only) . . . 185
8.1.1 Turning on remote control . . . 185

8.1.2 Assigning remote control contacts . . . 186
8.2 Limit values (single-channel modules only) . . . 188
8.2.1 Turning on limit switches . . . 189
8.2.2 Adjusting limit values . . . 190
8.2.3 Selection keys in the Limit switches menu . . . 192
8.3 Limit value combination (single-channel modules only) . . . 193
8.4 Set peak values . . . 196
8.4.1 Peak-value memory . . . 196
8.4.2 Combining peak-value memories . . . 197
8.4.3 Control of peak-value memory . . . 199
8.4.4 "Peak value" operating mode . . . 199
8.4.5 "Instantaneous value" operating mode . . . 200
8.4.6 Envelope curve operating mode . . . 201
8.4.7 Clear peak-value memory . . . 202
8.5 Version . . . 203
8.6 Switching . . . 204

9 Display . . . 207
9.1 Display format . . . 207
9.1.1 Select setup window . . . 208
9.1.2 Setup window Display format . . . 209
9.1.3 Setup window components . . . 210
9.1.3.1 Numeric value display . . . 211
9.1.3.2 Graphic display . . . 221
9.1.4 Status limit switch . . . 224
9.1.5 Data acquisition . . . 225
9.2 F keys . . . 226
9.2.1 F keys in measuring mode . . . 226
9.2.2 F keys in Setup mode . . . 228
9.3 Channel names . . . 229

10 System . . . 231
10.1 Password . . . 231
10.1.1 Define new user . . . 232
10.1.2 Password protection activation . . . 233

10.1.3 Set access for operator 234
10.1.4 Delete user 235
10.1.5 Change password 236
10.2 Save/load 237
10.3 Recording series of tests 242
10.3.1 Setting parameters of test series 243
10.3.2 Format of the MGCplus measurement files 261
10.3.2.1 Measured values 261
10.3.2.2 Time channels 263
10.3.3 MEA format in detail (MGC binary format 2) 264
10.4 Interface 269
10.4.1 Port usage 273
10.4.2 Communication processor and multi-client mode 273
10.5 Language 275
10.6 Time 276

11 Menu structure 277

Index 293

1 SAFETY INSTRUCTIONS

Intended use

The amplifier system is to be used exclusively for measurement tasks and directly related control tasks. Use for any purpose other than the above is deemed to be non-designated use.

In the interests of safety, the device should only be operated as described in the operating manuals. It is also essential to comply with the legal and safety requirements for the relevant application during use. The same applies to the use of accessories.

Each time, before starting up the equipment, you must first run a project planning and risk analysis that takes into account all the safety aspects of automation technology. This particularly concerns personal and machine protection.

Additional safety precautions must be taken in plants where malfunctions could cause major damage, loss of data or even personal injury. In the event of a fault, these precautions establish safe operating conditions.

This can be done, for example, by mechanical interlocking, error signaling, limit switches, etc.

General dangers of failing to follow the safety instructions

The amplifier system is a state of the art unit and as such is reliable. The device may give rise to residual dangers if it is inappropriately installed and operated by untrained personnel.

Any person instructed to carry out installation, commissioning, maintenance or repair of the device must have read and understood the operating manuals and in particular the technical safety instructions.

Residual dangers

The scope of supply and performance of the amplifier system covers only a small area of measurement technology. In addition, equipment planners, installers and operators should plan, implement and respond to the safety engineering considerations of measurement technology in such a way as to minimize residual dangers. On-site regulations must be complied with at all times. There must be reference to the residual dangers connected with measurement technology.

After making settings and carrying out activities that are password-protected, you must make sure that any controls that may be connected remain in a safe condition until the switching performance of the amplifier system has been tested.

Working safely

The supply voltage connection, as well as the signal and sense leads, must be installed in such a way that electromagnetic interference does not adversely affect device functionality (HBM recommendation: "Greenline shielding design", can be downloaded from http://www.hbm.com/Greenline).

Automation equipment and devices must be designed in such a way that adequate protection or locking against unintentional actuation is provided (access checks, password protection, etc.).

When devices are working in a network, these networks must be designed in such a way that malfunctions in individual nodes can be detected and shut down.

Safety precautions must be taken both in terms of hardware and software, so that a line break or other interruptions to signal transmission, such as via the bus interfaces, do not cause undefined states or loss of data in the automation device.

Error messages should only be acknowledged once the cause of the error is removed and there is no further danger.

Conversions and modifications

The amplifier system must not be modified from the design or safety engineering point of view except with our express agreement. Any modification shall exclude all liability on our part for any resultant damage.

In particular, any repair or soldering work on motherboards (replacement of components, apart from EPROMs) is prohibited. When exchanging complete modules, use only original parts from HBM.

The amplifier system and/or individual components are delivered from the factory with a fixed hardware and software configuration. Changes can only be made within the possibilities documented in the operating manuals.

Qualified personnel

are persons entrusted with siting, mounting, starting up and operating the product and who possess the appropriate qualifications for their function.

This device is only to be installed and used by qualified personnel strictly in accordance with the specifications and with the safety rules and regulations which follow. It is also essential to comply with the legal and safety requirements for the relevant application during use. The same applies to the use of accessories.

Qualified personnel includes people who meet at least one of the following requirements:

- Knowledge of the safety concepts of automation technology is a requirement and as project personnel, you must be familiar with these concepts.
- As automation plant operating personnel, you have been instructed how to handle the machinery and are familiar with the operation of the systems, components and technologies described in this documentation.
- As commissioning engineers or service engineers, you have successfully completed the training to qualify you to repair the automation systems. You are also authorized to activate, ground and label circuits and equipment in accordance with safety engineering standards.

Safety rules

Before starting up, make sure that the mains voltage and type of current stated on the type plate match the mains voltage and type of current at the place of operation and that the circuit used is sufficiently protected.

The mains plug must only be inserted into a grounded socket with a protection switch (protection class I).

Use only the mains cable included with delivery, which is fitted with a ferrite core.

The device must be switched off and the mains plug disconnected from the socket before opening the device.

Never pull the mains plug out of its socket by the supply lead.

Do not operate the device if the mains lead is damaged.

If an amplifier channel is removed, the module must be sealed with a blind panel.

Only operate built-in devices once they are installed in the housing provided.

The device complies with the safety requirements of DIN EN 61010 Part 1 (VDE 0411 Part 1); protection class I.

The insulation resistance of the connecting cables ($\leq$ 50V) must be at least 350V(AC).

1.1 Electromagnetic compatibility

The MGCplus device has been tested based on EMC product standard EN 61326-1:2013. This standard includes definitions of limit values and test levels for various electromagnetic environments.

Regarding emission (EME), requirements are included for class A (industrial environments) and class B (residential, business and commercial environments as well as small businesses). Laboratory applications also usually require class B.

The product standard here references to EN 55011:2009+A1:2010.

Regarding immunity to interference, the product standard includes requirements for controlled electro-magnetic environments (lowest requirements), general environments and industrial environments (highest requirement).

MGCplus meet the following requirements:

- Emission (EME): Class B
- Immunity to interference: Industrial environment

The MGCplus series and the individual modules thus essentially meet the highest requirements and are therefore suitable for use in all environments described in the product standard.

2 MARKINGS USED

2.1 Markings on the device

CE mark

By way of the CE mark the manufacturer guarantees that the product complies with the requirements of the relevant EC directives (the Declaration of Conformity can be found at http://www.hbm.com/HBMdoc).

Statutory waste disposal mark

In accordance with national and local environmental protection and material recovery and recycling regulations, old devices that can no longer be used must be disposed of separately and not with normal household garbage.

Electrostatic sensitive devices

Components marked with this symbol can be damaged beyond repair by electrostatic discharge. Please observe the handling instructions for electrostatic sensitive devices.

Any risk of residual dangers when working with the amplifier system are pointed out in these instructions by means of the following symbols:

2.2 The markings used in this document

Symbol	Significance
⚠ DANGER	Warns of an *imminently* dangerous situation in which failure to comply with safety requirements *will* result in death or serious physical injury.
⚠ WARNING	This marking warns of a *potentially* dangerous situation in which failure to comply with safety requirements *can* result in death or serious physical injury.
⚠ CAUTION	This marking warns of a *potentially* dangerous situation in which failure to comply with safety requirements *can* result in slight or moderate physical injury.
Notice	This marking draws your attention to a situation in which failure to comply with safety requirements *can* lead to damage to property.

Symbol	Significance
Important	This marking draws your attention to *important* information about the product or about handling the product.
Tip	This marking indicates application tips or other information that is useful to you.
Information	This marking draws your attention to information about the product or about handling the product.
Emphasis *See …*	Italics are used to emphasize and highlight text and identify references to sections, diagrams, or external documents and files.
Device -> New	Bold text indicates menu items, as well as dialog and window titles in the user interfaces. Arrows between menu items indicate the sequence in which the menus and sub-menus are called up
Sampling rate	Bold text in italics indicates inputs and input fields in the user interfaces.

3 INTRODUCTION

3.1 Degree of protection

The degree of protection given in the technical data indicates the suitability of the housings for various ambient conditions and also the protection of persons against potential risks when used. The letters **IP** (International Protection) which are always present in the designation, are followed by two digits. These indicate which degree of protection a housing offers against contact or foreign objects (first digit) and moisture (second digit).

MGC*plus* devices are available with degree of protection IP20.

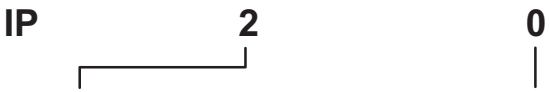

Code index	Degree of protection against contact and foreign objects	Code index	Degree of protection against water
2	Protection against contact with fingers, protection against foreign objects with ∅> 12 mm	0	No water protection

3.2 Notes on documentation

The present operating manual explains operation of the device and how to perform measurements with it.
Further information and the possibility to download the system CD can be found on the Internet at www.hbm.com

Guides

Several guides are available to help you:

- The *header* shows you which section or sub-section you are currently reading. For example:
  Introduction
  Notes on documentation
- ➔ *section 6 „Functions and symbols of the AB22A“* for explanations of the AB22A display and control unit.
- ➔ *Section 11 „Menu structure“* provides an overview of the drop-down and setting menus of the display and control unit.

3.3 System description

The MGC*plus* system is structured modularly. Depending on the housing variant, up to 16 slots are available for single and multi-channel amplifier modules. Thus up to 128 measuring points can be measured in an MGC*plus*.

Each amplifier module works independently through its own CPU. Data preparation, for example taring, filtering and measuring range adjustment, is carried out digitally. This eliminates the disadvantages of analog data preparation, such as time and temperature-dependent drift, errors due to component tolerances, greatly limited flexibility and extensive circuitry. An essential precondition for this is analog/digital conversion with no loss of information. The digitally conditioned signal is directed to the internal bus.

For single-channel modules, two analog outputs (voltage) are available in addition to the digital measured values.

An internal standard PC computer in credit-card format collects data with a total sampling rate of up to 307,200 measured values per second (4-byte integer format: 3-byte measured value + 1-byte status). All measurement signals can be acquired in parallel, since each channel has its own ADU. No Sample & Hold or Multiplexer is used in the MGC*plus*. This ensures continuous digital filtering and maximum signal stability.

Data is sent to an external computer or PLC via interfaces such as Ethernet.

A large part of the system functionality is implemented by device-internal software (also called firmware). We therefore recommend you use our free firmware updates and always keep your devices updated to the latest firmware version. For further information go to www.hbm.com/downloads.

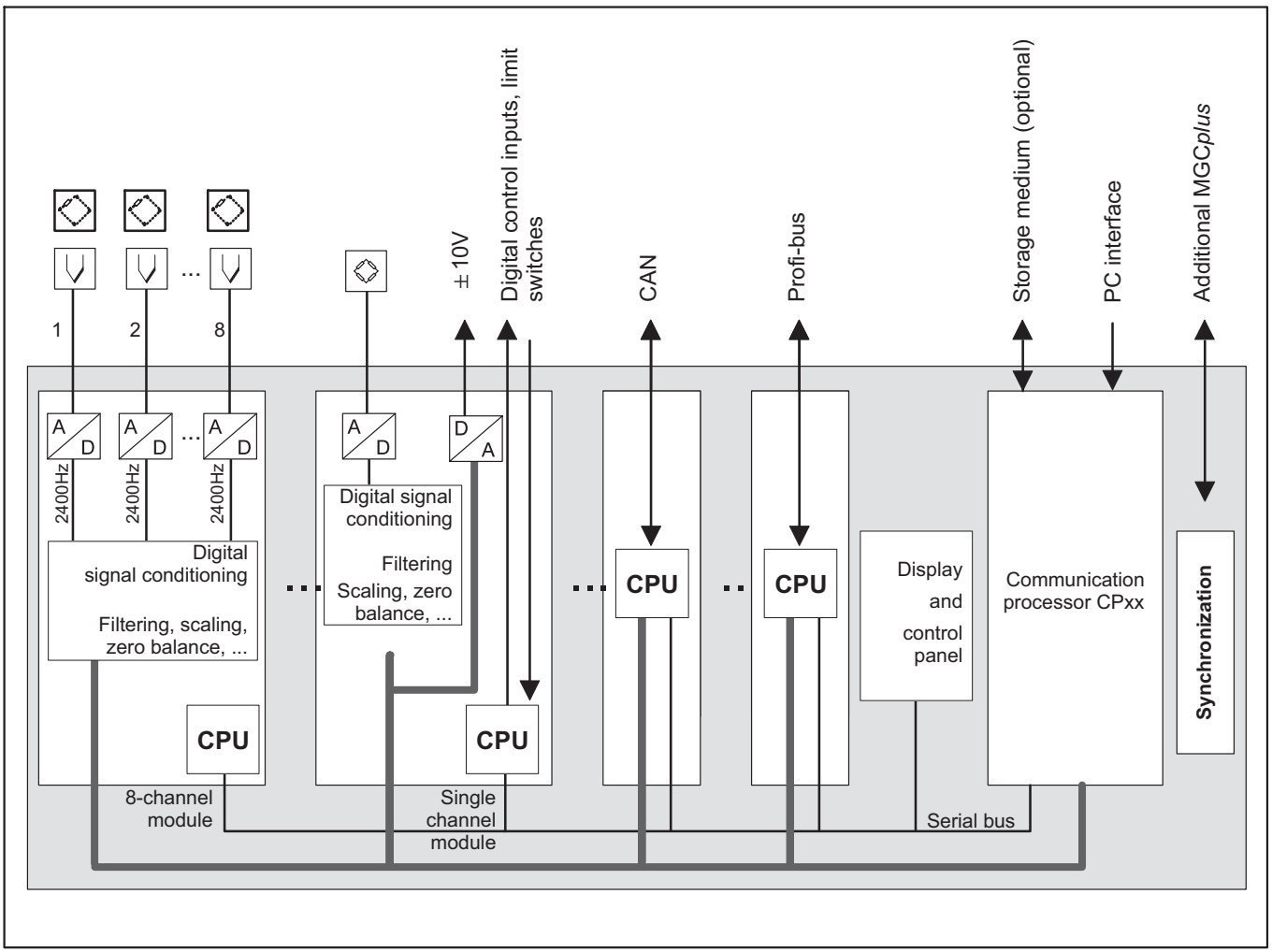

Fig. 3.1 Block diagram of MGCplus

3.4 Layout of the MGC*plus* device

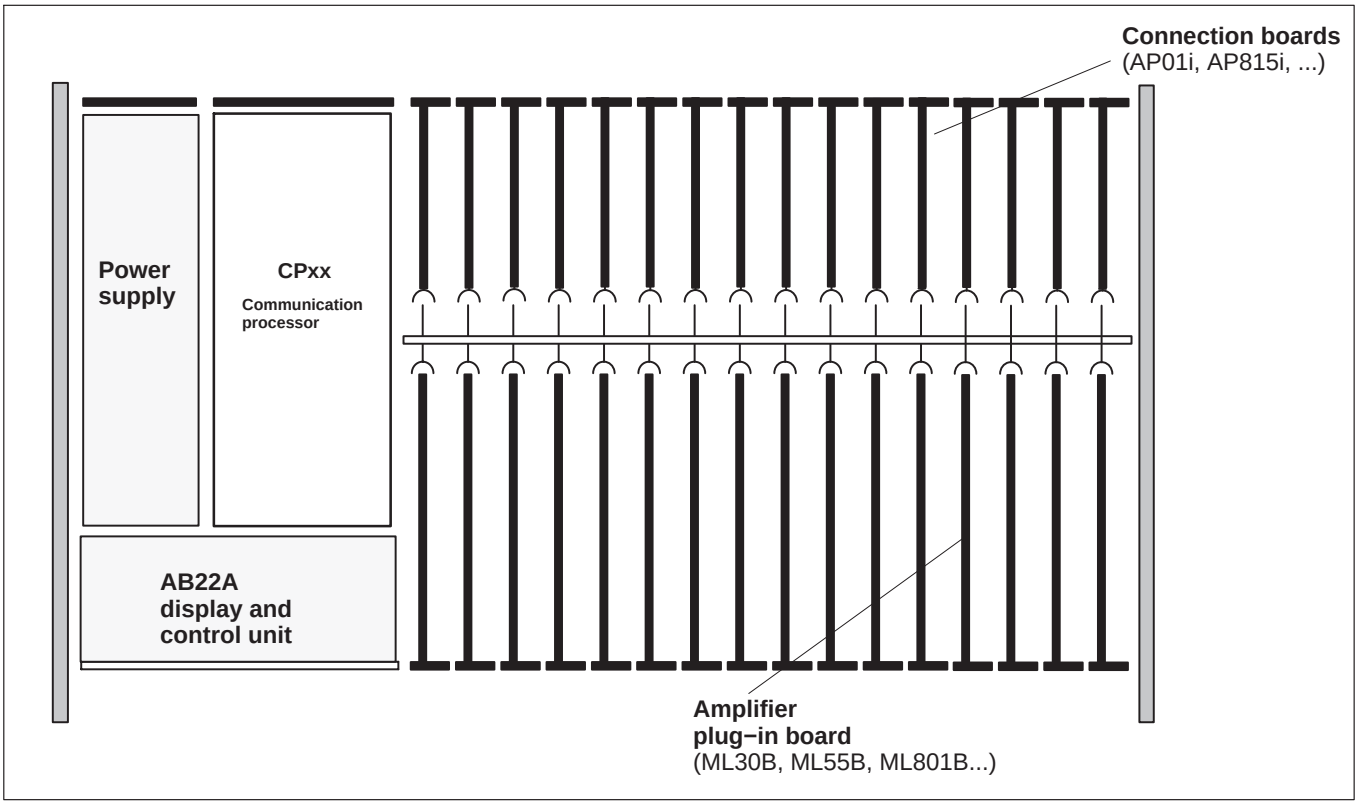

Fig. 3.2 Device layout with display and control unit AB22A

Double-width connection boards (AP03i, AP455i) must be plugged into the odd-numbered slots. This also applies to the corresponding amplifiers, regardless of the width.

Double-width amplifiers (ML38B) must be plugged into the odd-numbered slots. This also applies to the corresponding connection board, regardless of the width.

When asynchronous modules are used (ML7XB with more than eight subchannels), the sequence ‘asynchronous-synchronous-asynchronous’ is not permissible.

3.5 MGC*plus* housing designs

The MGC*plus* system is available with different housing versions (dimensions in mm; 1 mm = 0.03937 inches):

Desktop housing TG 009E (177x161x386)

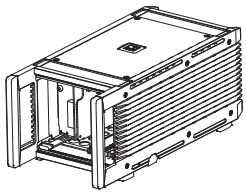

Desktop housing TG 001E (258x161x386)

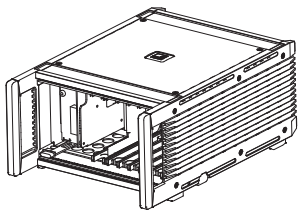

Desktop housing TG 003E (462x161x386)

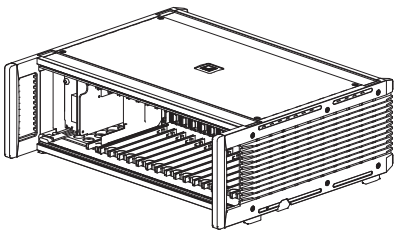

19" rack frame ER 003E (482x133x365)

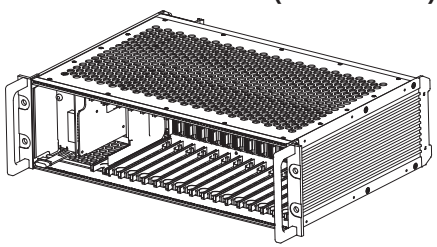

Desktop housing	Rack frame	Slots	Supply voltage (V)	Weight, approx. (kg) TG/ER
TG001E	-	6	230 (115) ~	5.9 [1)]
TG003E	ER003E	16	230 (115) ~	8.3 / 5.5 [1)]
TG009E	-	2	230 (115) ~	5.0 [1)]

1) With the NT030 power pack, the enclosures weigh about 150g less each

All basic devices consist of the following components:

- AB22A display and control unit
- Amplifier modules (ML10B, ML30B, ML55B, ML801B ...)
- Housing
- Connection boards (AP01i, AP815i, ...)
- Power supply

Options:

- *CP52* (Communication processor for communication with computer that allows for data storage)

3.6 Possible amplifier/connection board combination

Single-channel amplifier

	ML01B	ML10B	ML30B	ML38B	ML55B	ML60B
TEDS AP01i		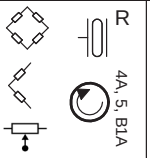			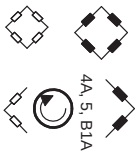	
TEDS AP03i		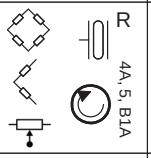			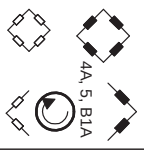	
AP14		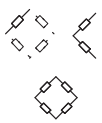	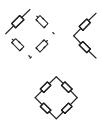		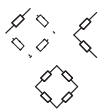	
AP17						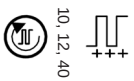

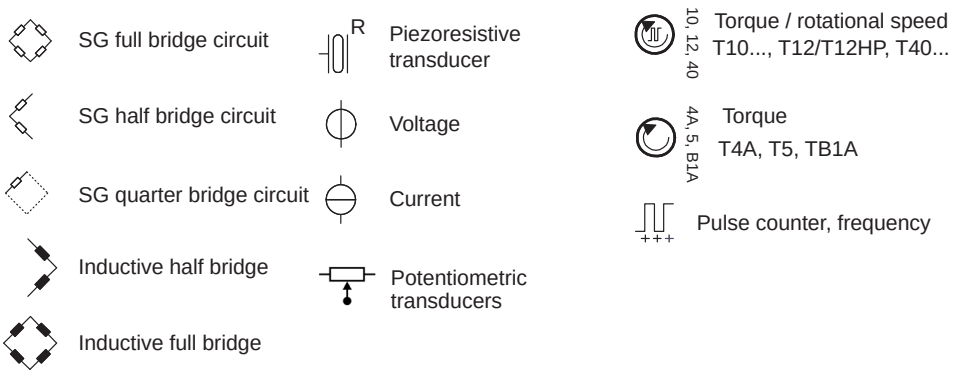

1) For the combination of ML55B with AP14, a one-time zero calibration must always be performed after setting up the measurement chain.

Multi-channel amplifiers

		ML801B	ML455
TEDS	AP402i		
TEDS	AP418i		
TEDS	AP455i		
	AP801 AP801S6		
	AP809		
TEDS	AP810i		
TEDS	AP814Bi		
TEDS	AP815i		
	AP835		
TEDS	AP836i		

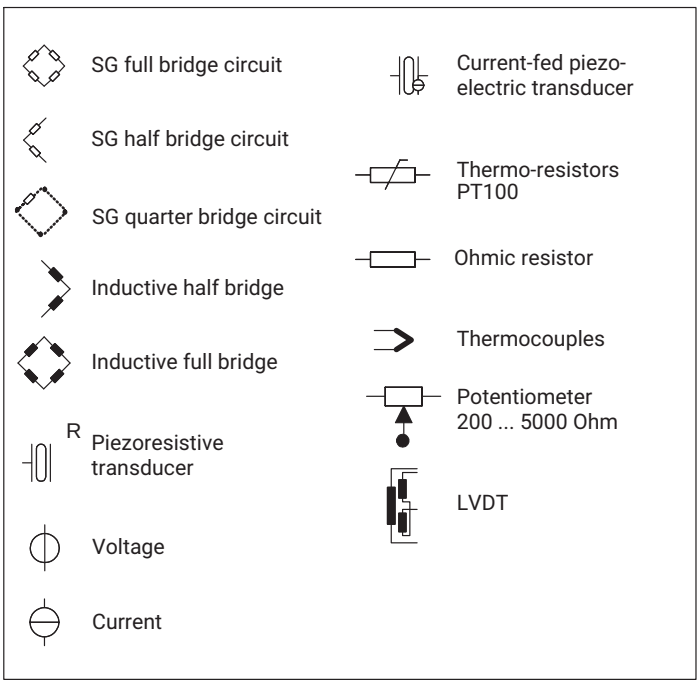

Special function modules

	ML71B [1]	ML74B	ML77B [1]	ML78B [1]
AP71	CAN			
AP74		CANHEAD		
AP75				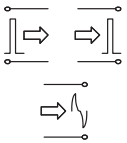
AP77				
AP78				

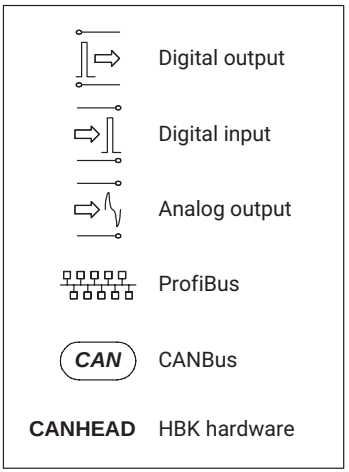

[1] Separate Operating Manual available on hbkworld.com

3.7 CP52 communication processor

3.7.1 Mounting

For type "D" housings (ER003D or TG001D, etc.) the existing communication processor (CP22/CP42) can be replaced by the CP52 communication processor.

- Loosen the screws on the old communication processor, the blind panel (only with CP22) and the cover of the NT030 power supply unit.
- Remove the parts.
- Insert the new CP52 communication processor and screw it in place.
- Fit the power supply cover of the NT030 and screw the cover in place.

The process is similar when subsequently installing a CP52 communication processor in an MGC*plus* housing (type "D" or type "E") that was initially configured without a communication processor.

- Loosen the screws on the blind panels, if there are any, of the SY03 synchronization interface and the power supply cover.
- Remove the parts.
- Insert the new CP52 communication processor and screw it in place.
- Fit the power supply cover of the NT030 or NT040 and screw the cover in place.

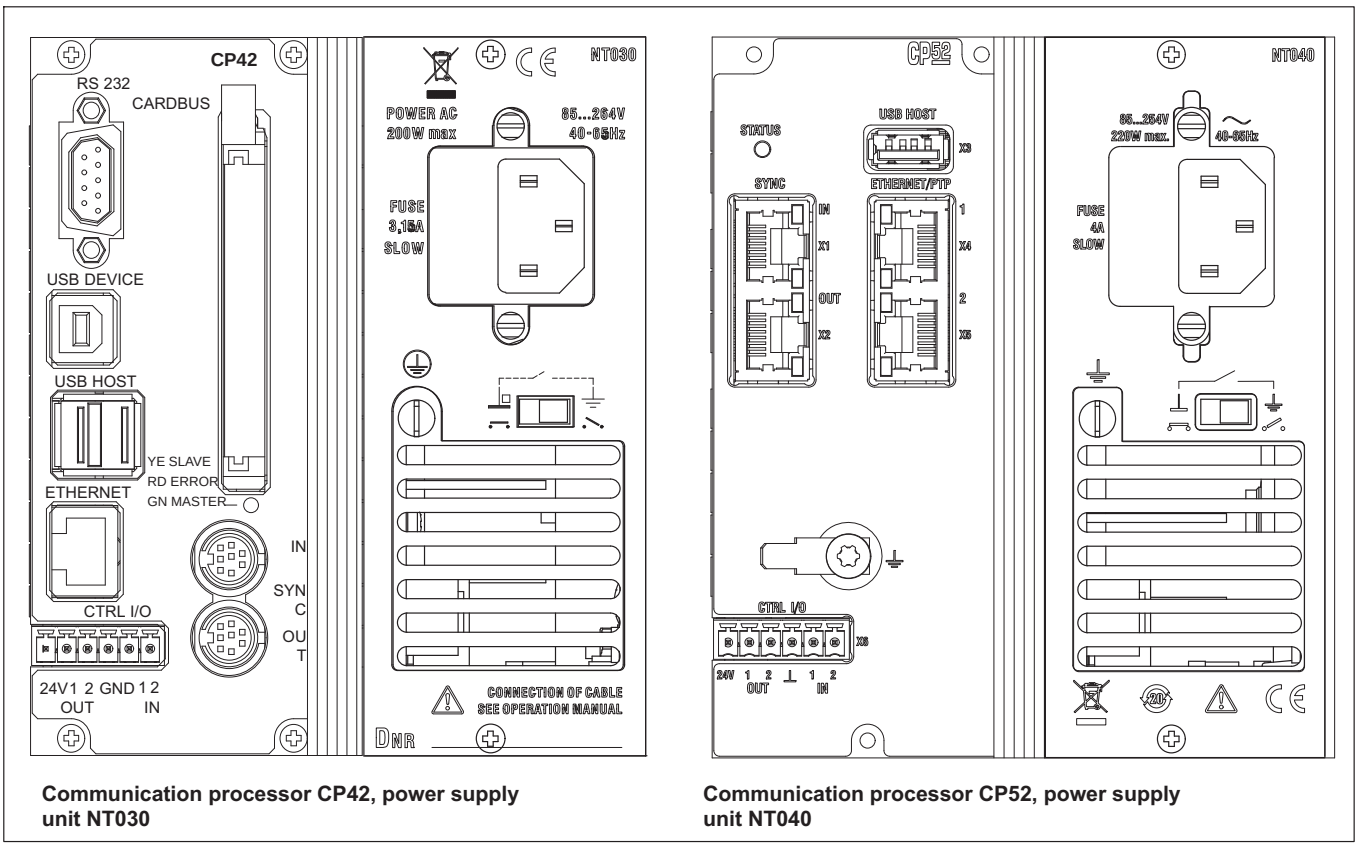

Communication processor CP42, power supply unit NT030

Communication processor CP52, power supply unit NT040

Fig. 3.3 Rear views

If the communication processor is installed subsequently in a system where none was present before, the housing cover must also be removed to check the setting of the CP switch (S3). It must be set to "yes" so the system can be started with the communication processor. Then the housing cover can be closed again.

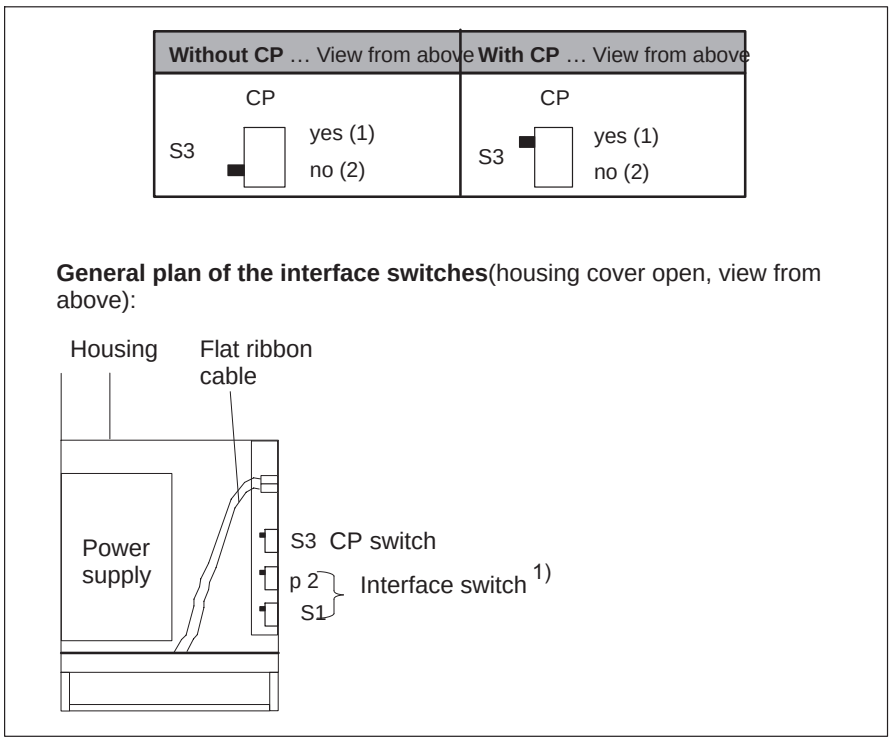

Fig. 3.4 General plan of the interface switches

Due to the new functions of the CP52 communication processor, a firmware update of the AB22A display and control unit is necessary. The firmware update program MGCpLoad and the latest firmware are available from www.hbm.com/downloads.

1) The two interface switches S1 and S2, when viewed from above, should appears as shown in the diagram, regardless of whether MGCplus is operating with AB22A or BL05 (blind panel).

3.7.2 Status LED

The CP52 communication processor has a status LED with three colors: green, yellow and red.

LED lit	Meaning
Green	The device is ready for measurement, no errors present.
Yellow	The device is in the boot process.
Red	There is an error present which could possible interfere with the measurement. In this case the error should be read with a terminal program (for example in the MGCplus Assistant) and rectified. For more information about the EES command used for this, please refer to the programmer documentation on the system CD.

3.8 Conditions at the place of installation

⚠ CAUTION

- Protect the devices in a desktop housing from moisture and dampness or weather conditions such as rain, snow, etc.
- Make sure that you do not cover the ventilation openings at the side, the openings for the power pack fan on the back side of the device and the openings underneath the device.
- Do not expose the device to direct sunlight.
- Comply with the maximum permissible ambient temperatures for the system devices, as stated in the technical data sheet.
- For installation in 19" electrical enclosures, due to poorer heat dissipation, measures must be taken to ensure that the maximum permitted ambient temperature (refer to the technical data sheet) is not exceeded! We recommend forced venting in any case and in especially critical cases intermediate spaces between the upper and lower rack frames.
- The devices are classified in overvoltage category II, degree of pollution 2.
- Install the device so that it can be disconnected from the mains at any time without difficulty.
- It is safe to operate the MGC*plus* up to an altitude of 2000 m.

3.9 Maintenance and cleaning

The MGC*plus* system devices are maintenance-free. Please note the following points when cleaning the housing:

⚠ CAUTION

Disconnect the mains plug from the socket before cleaning.

- Clean the housing with a soft, slightly damp (not wet!) cloth. You should *never* use solvents, since this may damage the labeling on the front panel and the display field.
- When cleaning, ensure that no liquid gets into the device or connections.

4 CONNECTION

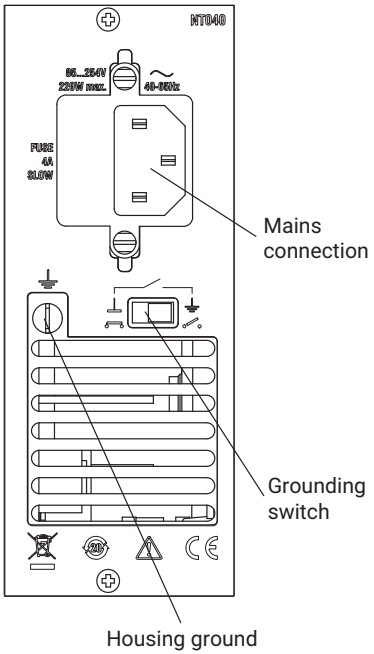

4.1 Connecting the MGC*plus* in a tabletop housing/rack frame

4.1.1 Mains connection

The NT030 and NT040 power supply units are designed for a 115 - 230 V connector and for a maximum configuration of 16 modules and connection boards. Voltage adaptation to a 115V/230V network occurs automatically. The power pack fan is temperature-controlled and is automatically switched on only when necessary.

If the MGC*plus* is connected with the mains cable included with delivery, a safe and reliable connection via the protective conductor is ensured.

The power pack is protected internally with a fine-wire fuse.

⚠ CAUTION

The power supply fuse may only be replaced by the manufacturer's service personnel!

Grounding switch

In the factory setting ($\overline{\bullet\bullet}$), the grounding switch connects supply voltage zero with the protective conductor. If external devices (transducer, computer) have already set up this connection resulting in ground loops (hum-pickups), the grounding switch must be opened ($\not{\bullet\bullet}$).

4.1.2 Synchronization of multiple CP52 devices

4.1.2.1 Synchronization of multiple CP52 devices via a synchronization jack

Connected devices are automatically detected and synchronized when synchronization jacks are occupied. A distinction is made between the sync master and the sync minor. A network of devices always has one sync master and at least one sync minor. Connect the master device to the first minor device (Sync In, X1) via the output jack (Sync Out, X2). If there are more minor devices, connect the input jack (Sync In, X1) to the output jack (Sync Out, X2) of the preceding minor device.

LED Sync Out	Status
Green	Device is ready for operation and the time signal is present on the Sync output.
Yellow	There is no valid time signal present on the Sync output.
LED Sync In	**Status**
Green	The device is in minor mode, correctly synchronized and ready for operation.
Yellow	The device is in minor mode but is not synchronized.

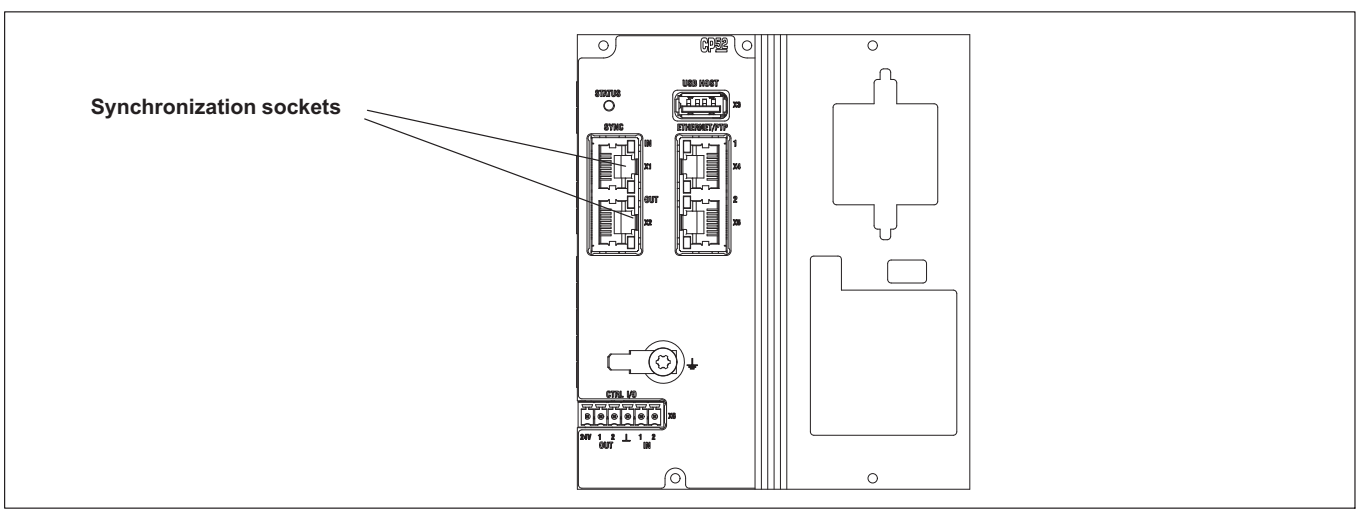

If several MGCplus systems are to be synchronized with each other, each system must be equipped with a CP52 communications processor. To synchronize MGCplus systems with CP52, you need a synchronization cable with the HBM part number 1-KAB2125-2 (2 m in length).

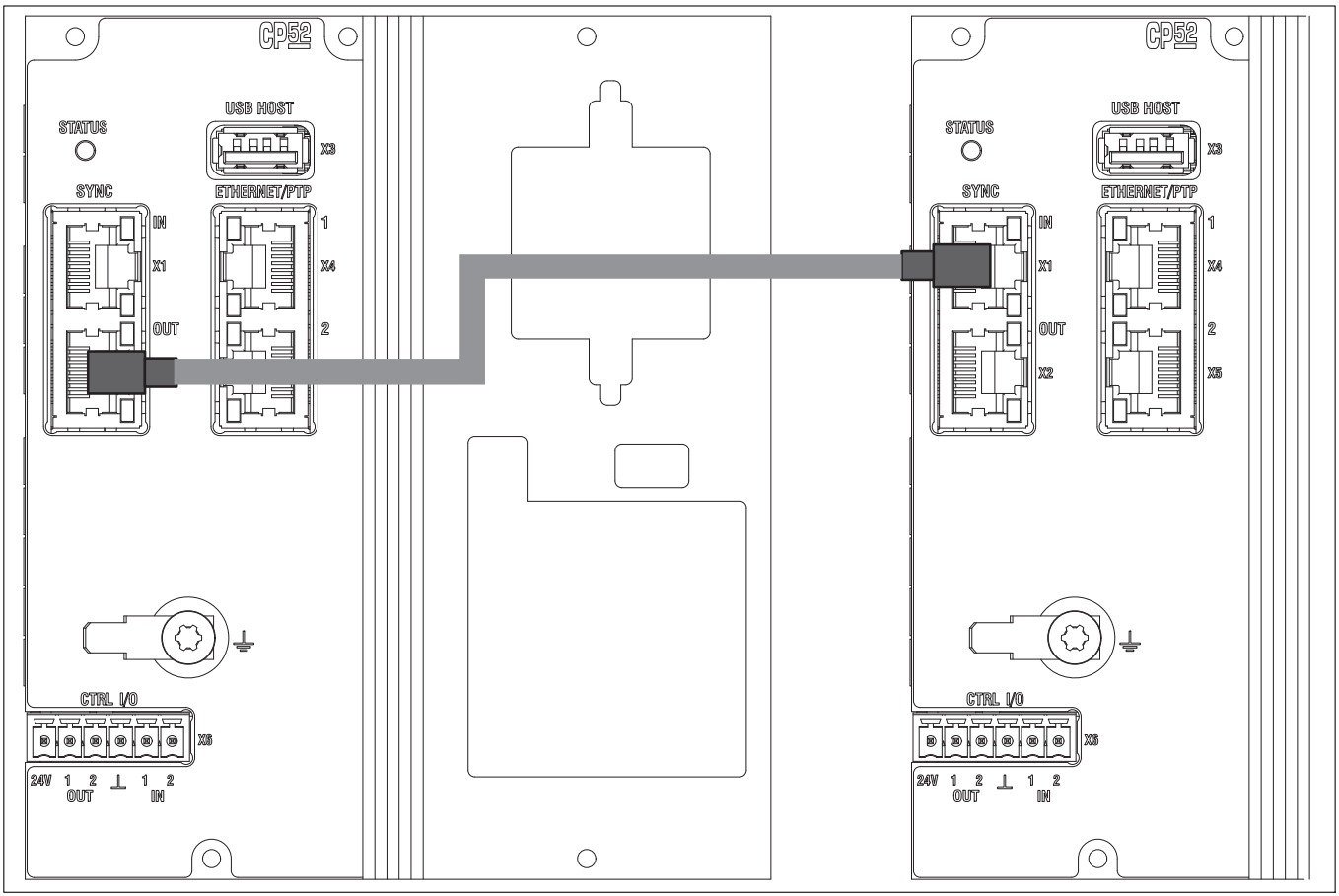

Fig. 4.1 Example of synchronizing two MGCplus systems equipped with CP52.

The overall length of the synchronization chain (total length of cable between the sync master and the last sync minor) must be less than 150 m. A termination resistor should be used if the line length is >15 m. We recommend that you attach a termination resistor connector to the Sync Out socket (X2) of the last sync minor. This connector is available from HBM on request.

Powering up the system

When connecting the system, the sync minors must be connected first. Connect the system that will work as the sync master last of all.

4.1.2.2 Synchronization of multiple CP52 devices via Ethernet IEEE1588:2008 (PTPv2)

If there is a long distance (> 150m) between MGCplus devices with CP52 or if synchronization via the synchronization jack is not possible for other reasons, the option for synchronization via Ethernet IEEE1588:2008 (PTPv2) is available on the upper Ethernet interface (X4).

To use this, the devices must be connected with a PTP-capable Ethernet switch and all of them must be set to a data transfer rate of 100 Mbps. Afterall devices in the group have been set to this synchronization mechanism (this can be done in catman easy/AP, the MGCplus Assistant or via the AB22A display and control panel), the setting parameters listed below – time delay, transport protocol and domain must be adjusted.

If the setting is correct the devices synchronize themselves automatically (device with the lowest MAC address is master) or, if present, with a Grandmaster Clock. In this case all MGCplus devices are PTP minors.

The Transparent Clock (TC) mode is supported here. After a system reset it may take up to two minutes in the most unfavorable case until synchronization via PTPv2 is complete again.

The following setting parameters are available:

Time delay:

- End-2-End (E2E)- (default setting)
- Peer-2-Peer (P2P)
- Auto

Transport protocol:

- UDPv4- (default setting)
- UDPv6
- IEEE802.3

Domain:

0 (default setting) ... 127

With synchronization via PTP, the LEDs on the synchronization jack indicate states as follows:

PTP master	PTP minor
Green LED Sync Out is lit	Green LED Sync Out is lit
Green LED Sync In is not lit	Green LED Sync In is lit

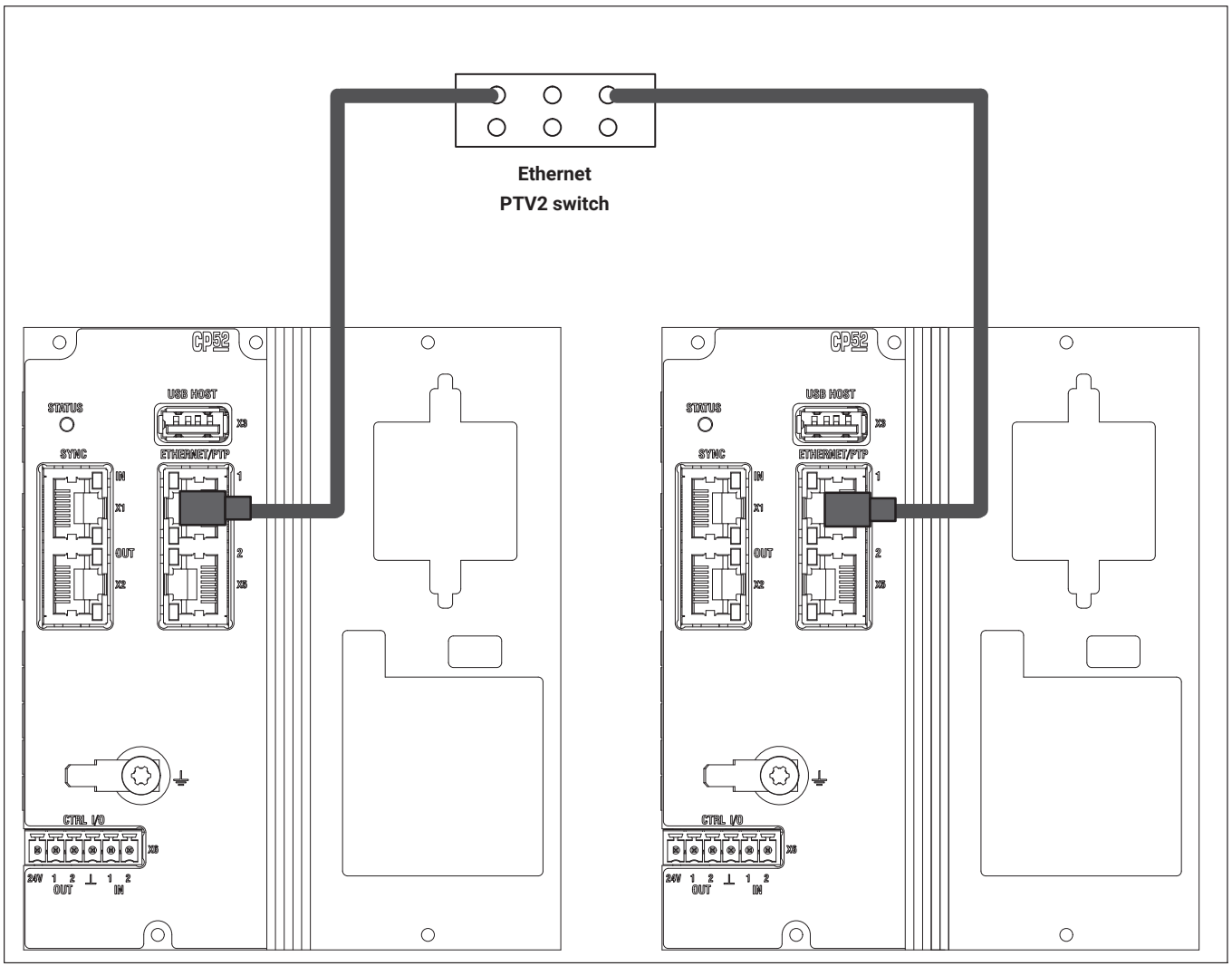

Fig. 4.2 Two CP52 devices synchronized via PTPv2

It should be noted here that when synchronizing via PTPv2, the clocks and carrier frequencies, etc. of the devices are synchronized with high precision (< 1 μs), but there is no shared triggered start of acquisition.

4.1.3 Synchronization of CP52 with CP42

The synchronization jack enables MGCplus systems with CP52 to be synchronized with MGCplus systems with CP42.

To do this note the following points:

It is recommended that CP42 is used as synchronization master in systems consisting of CP42 and CP52. Possibly more CP42 followed by one or more CP52 should be connected to the synchronization master.

Use the following cable for this:

1-KAB2127-2: CP42 (master) to CP52 (minor)

The synchronization status for CP42 is indicated by a multicolor LED.

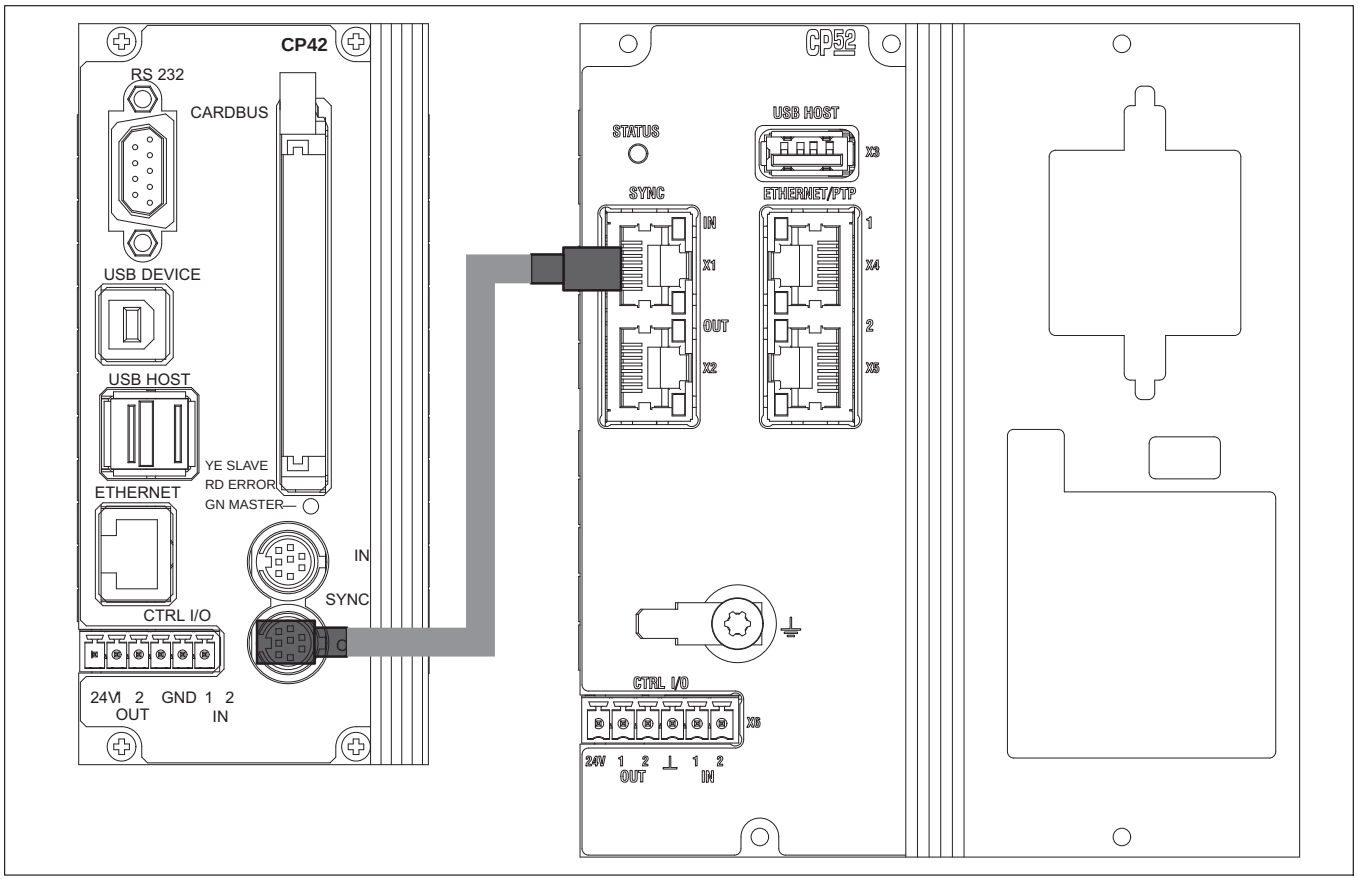

Fig. 4.3 Example of synchronizing two MGCplus systems equipped with CP52 and CP42.

4.1.4 Synchronization of MGCplus with other HBM or PTPv2-compliant devices

The PTPv2 synchronization enables MGCplus (with CP52) to be synchronized with other HBM devices (e.g. QuantumX (Type B), SomatXR) with an accuracy better than 10 µs.

PTv2 also enables non-HBM devices that support PTPv2 (e.g. cameras, pressure scanners) to be synchronized with high precision.

It is also essential to ensure at this point that the setting parameters of all devices in the group all have the same settings (see 4.1.2.2). The LEDs of the CP52 show the same thing as with a simple MGCplus topology.

4.2 Shielding design

Sources of interference can cause electromagnetic fields which can induce interference voltages inductively or capacitively via the connection cable and device housing in the measuring circuit and therefore interfere with the device function. It must be ensured that the devices used in the system also do not transmit any electromagnetic interference. Electromagnetic compatibility (EMC), which encompasses both the required electromagnetic interference immunity (EMI) and the permissible electromagnetic interference emissions (EME), has become increasingly important over the years.

The HBM Greenline shielding design

The measurement chain is completely enclosed by a Faraday cage by appropriate routing of the cable shield. The cable shield is extensively connected with the transducer housing and is routed via the conductive plug to the amplifier housing. The influence of electromagnetic interference is significantly reduced by these measures.

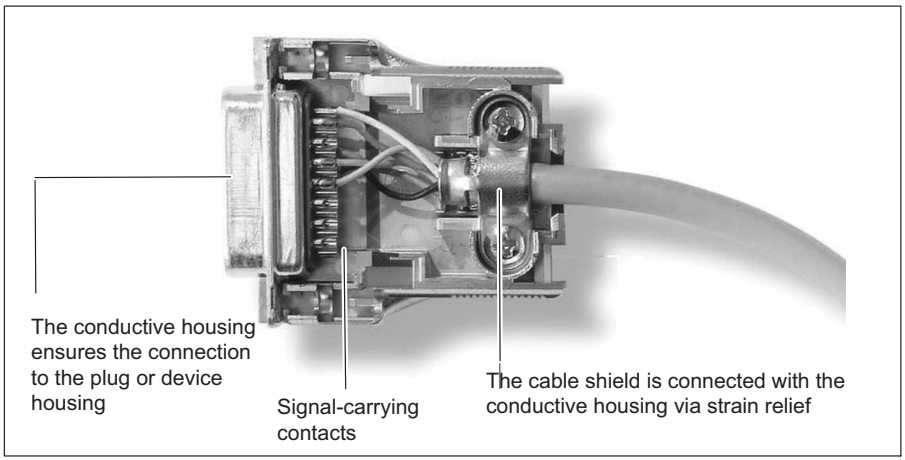

Fig. 4.4 Routing of the cable shield on the plug

Notice

All parts of the measurement chain (including all cable connection points such as plugs and couplings) must be surrounded by a closed EMC-tested shield. Shield junctions must represent a full contact, closed and low-impedance connection. This is the case for original HBM plug connections.

Ground connection and grounding

As the signal ground and shielding are separated in EMC-compliant cabling, the shielding can be connected at more than one point to the ground, i.e. via the transducer (metal housing) and the amplifier (housing is connected to the ground conductor).

If there are differences in potential in the measuring system, a potential compensating line must be laid (recommended value: highly flexible stranded wire, wire cross section 10mm^2). Signal and data leads must be set up so they are physically separated from current-carrying power lines. Ideally, cable ducts made of sheet metal with an internal partition should be used. Signal ground, ground and shielding must be laid out separated as much possible.

In order to minimize the effect of electromagnetic interference and differences in potential, the signal ground and ground (or shielding) are designed to be physically separate in the HBM devices. The ground connection or a separate mains protective conductor should serve as the ground connection, as is the case for potential compensation in buildings, for example. The ground cable should not be connected to a radiator body, water pipe or similar objects.

Connecting transducers with double shield technique

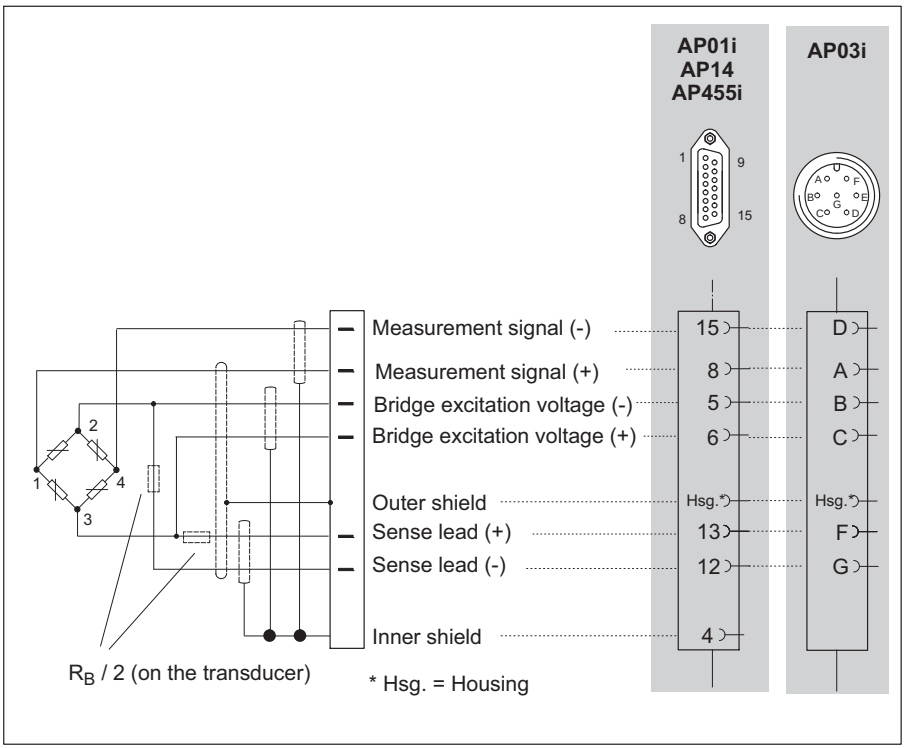

HBM recommends this connection technique for measuring amplifiers ML10B, ML30B, ML38B, ML55B and ML455 with connection boards AP01i, AP03i, AP14 and AP455i with very small measuring ranges, in environments especially subject to interference and when long cables are used.

This applies to all bridge connections.

When using long cables and with a high transducer resistance, HBK additionally recommends soldering resistors in the sense leads. The resistors should be placed as close as possible to the transducer. The value of the resistances must be half that of the bridge resistance ($R_B/2$).

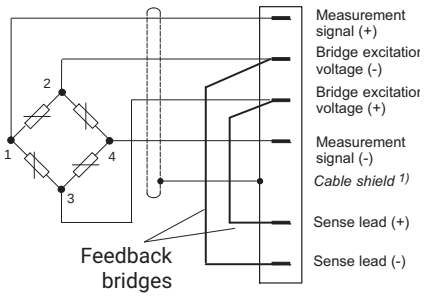

4.3 Connecting the transducer

Important

Transducers with four-wire configuration
If you connect a transducer with a 4-wire cable, you must connect the sense lead with the corresponding bridge excitation circuit in the transducer plug (sense line (-) with bridge excitation voltage (-) and sense lead (+) with bridge excitation voltage (+)[1]. A cable extension may only be implemented with 6-wire configuration.

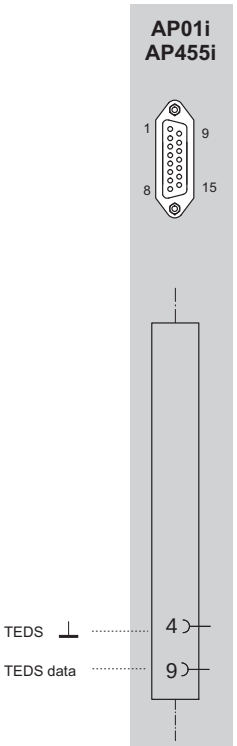

4.3.1 Connecting separate TEDS modules

Important

Single-channel amplifier MLxx (together with connection board AP01i) must have at least hardware revision 1.32 or higher.

1) For cable lengths >50m, a resistor of half the value of the bridge resistance (RB/2) must be activated on the transducer instead of each feedback bridge. If the transducers are calibrated in a 6-wire configuration, resistors must be activated directly into the sense lead.

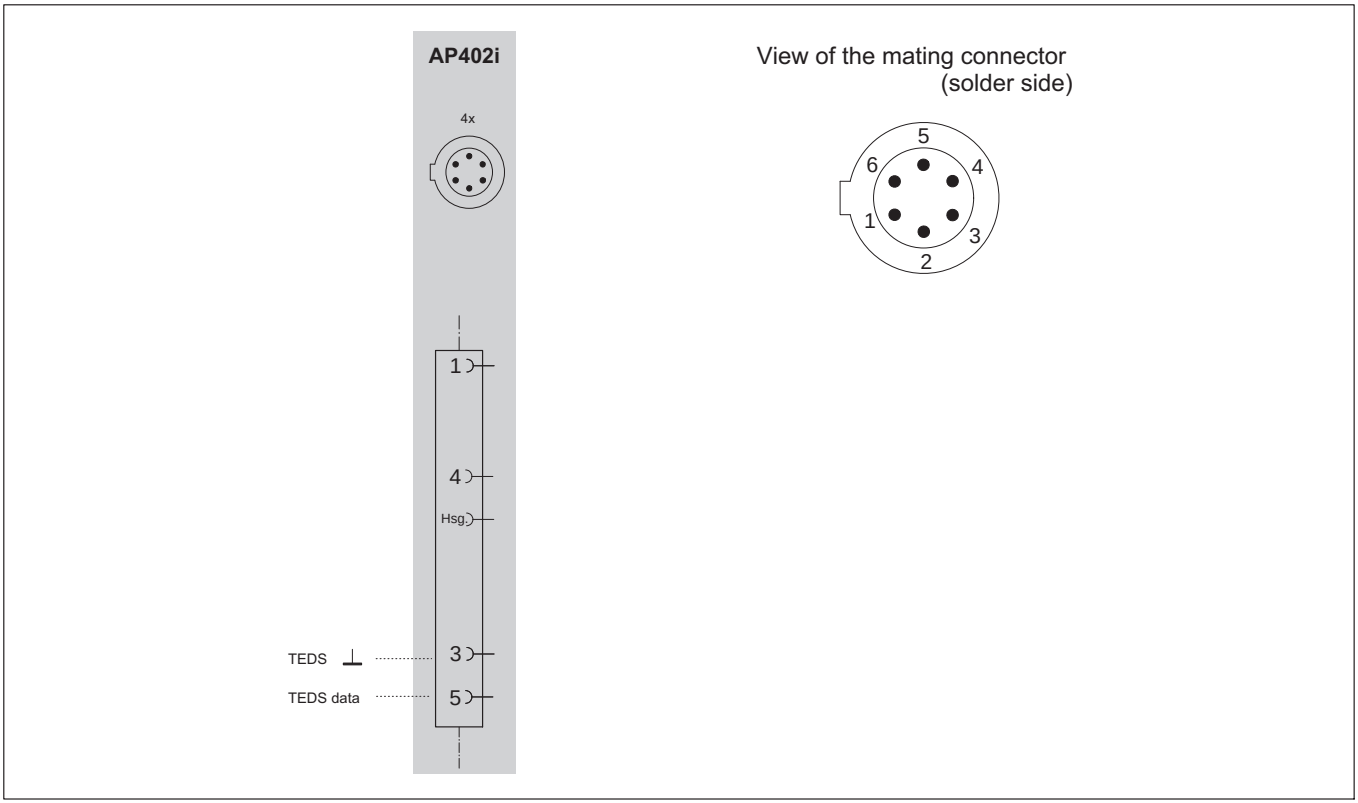
AP402i
4x
1
4
Hsg
3
5
TEDS
TEDS data
View of the mating connector
(solder side)
5
6
4
1
3
2

4.3.2 SG full bridges, inductive full bridges

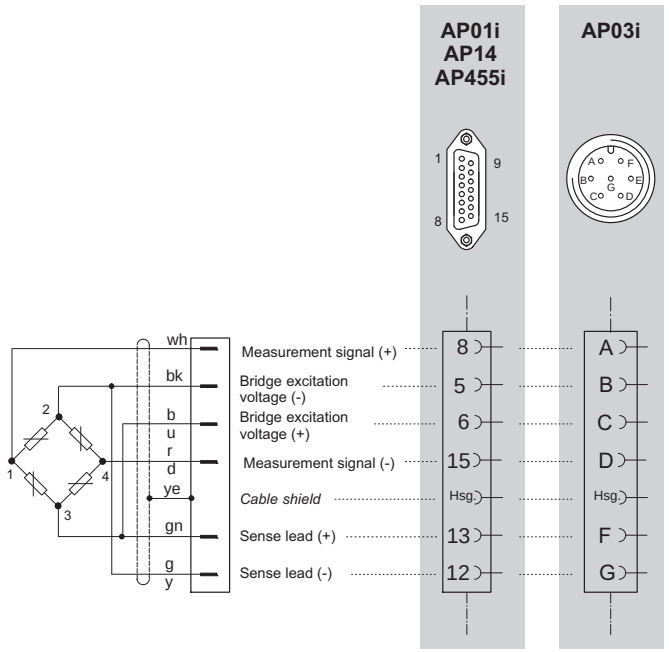

Cable color code: wh= white; bk= black; bu= blue; rd= red; ye= yellow; gn= green; gy= gray

4.3.3 Full bridge circuits on AP810i/AP815i

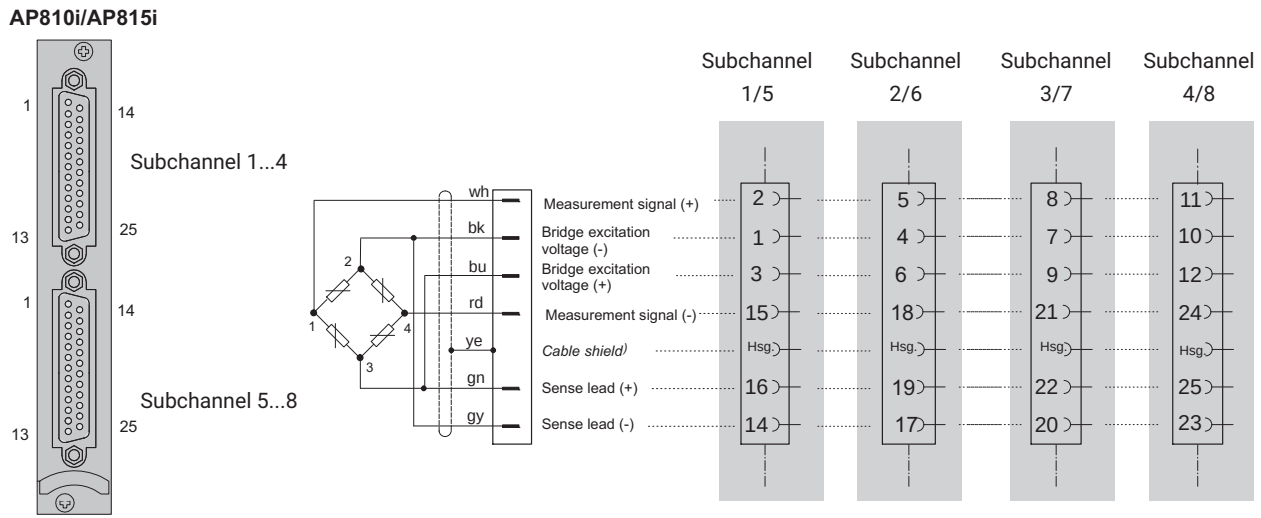

Cable color code: wh= white; bk= black; bu= blue; rd= red; ye= yellow; gn= green; gy= gray

4.3.4 Strain gage half bridges, inductive half bridge circuits

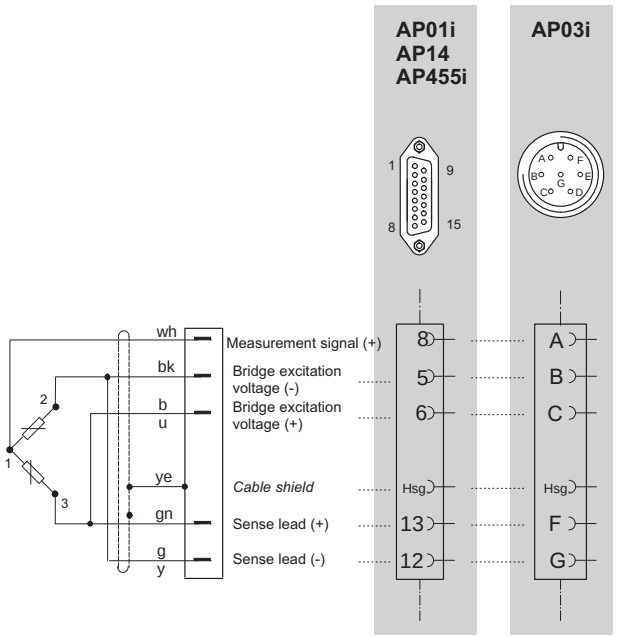

Cable color code: wh= white; bk= black; bu= blue; rd= red; ye= yellow; gn= green; gy= gray

4.3.5 LVDT transducers

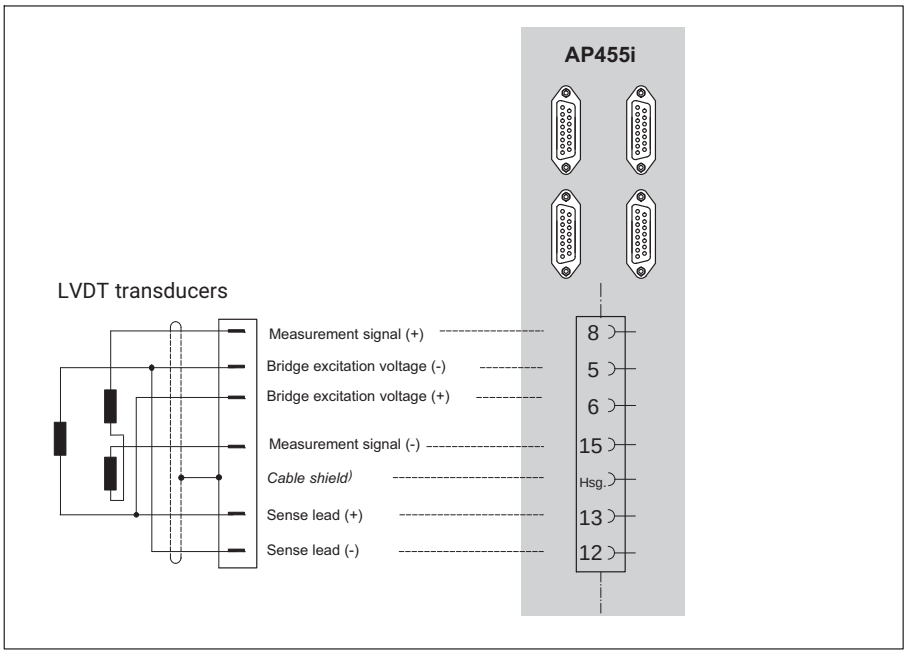

4.3.6 Strain gage half bridges on AP810i

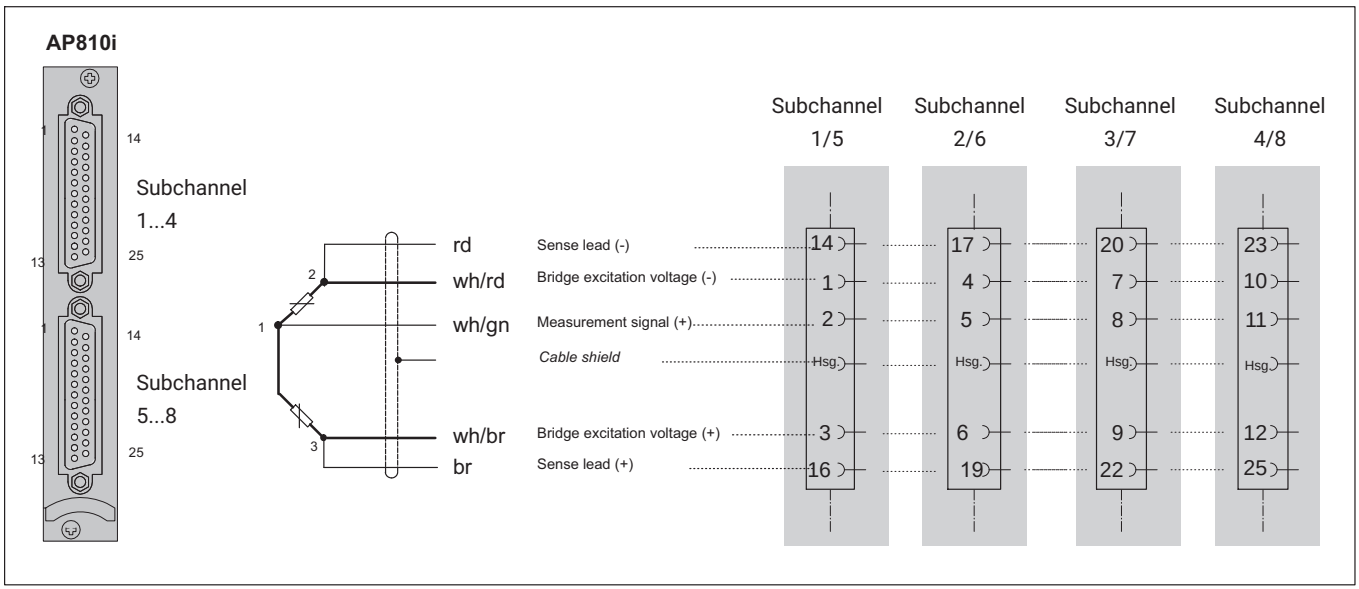

4.3.7 Strain gage half bridges on AP815i

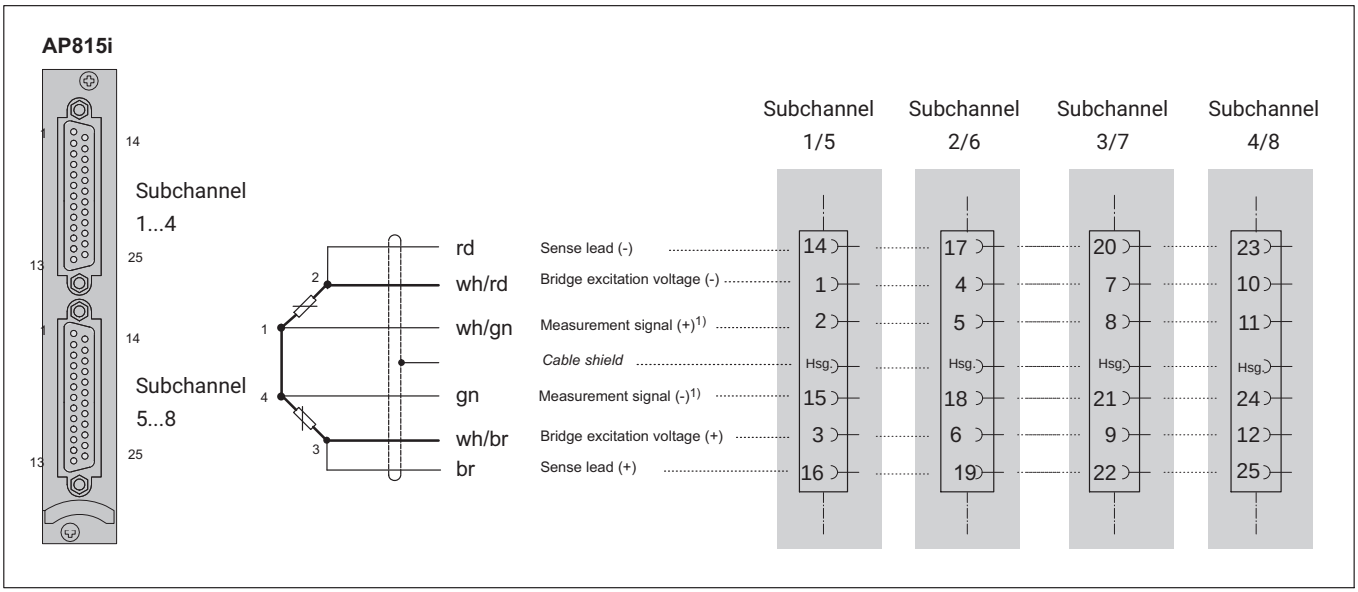

AP815i can measure decentralized half bridge circuits for which the active SGs are separated by a line.

1) With decentralized half bridge circuits the measured value must be acquired at both ends of the connecting line between the active SGs. With standard half bridge circuits a connector can also be bridged.

4.3.8 Single strain gage

4.3.8.1 Single strain gage on AP14

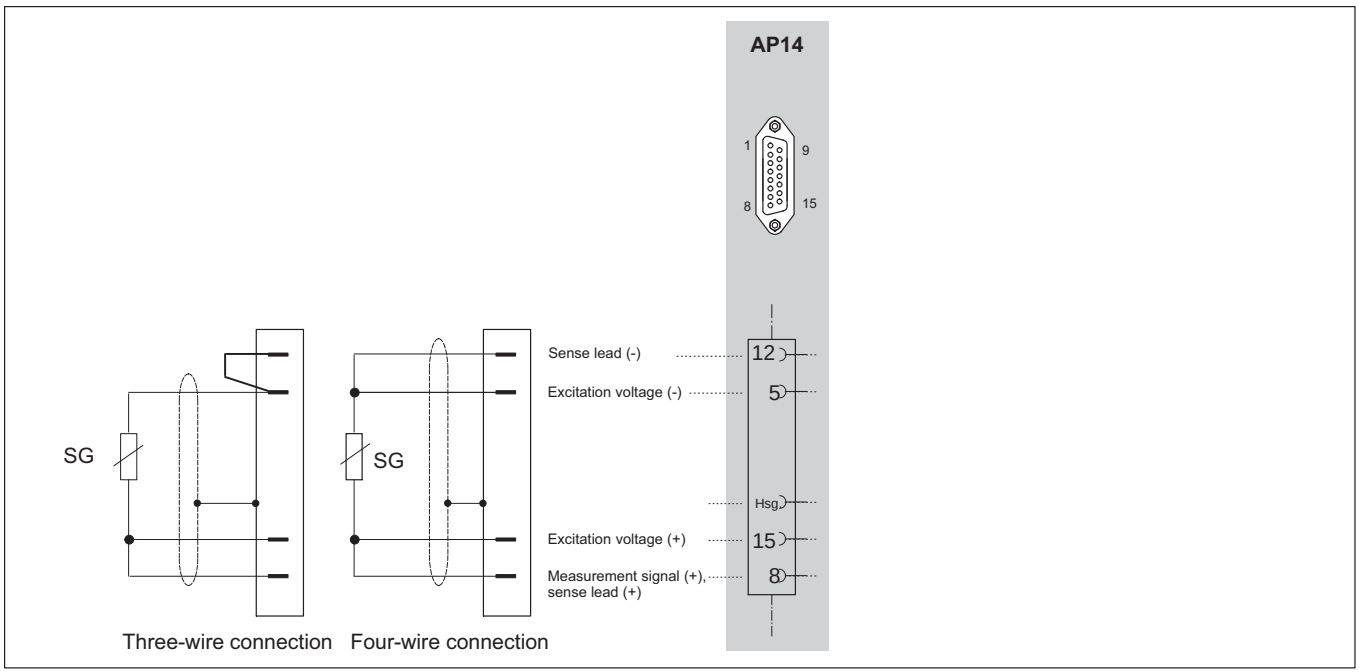

Important

If the strain gage is in a three-wire connection, symmetrical cables must be used to ensure that cable resistance is correctly compensated. Asymmetrical cables cause zero drift and change the sensitivity.

4.3.8.2 Single strain gage on AP814Bi

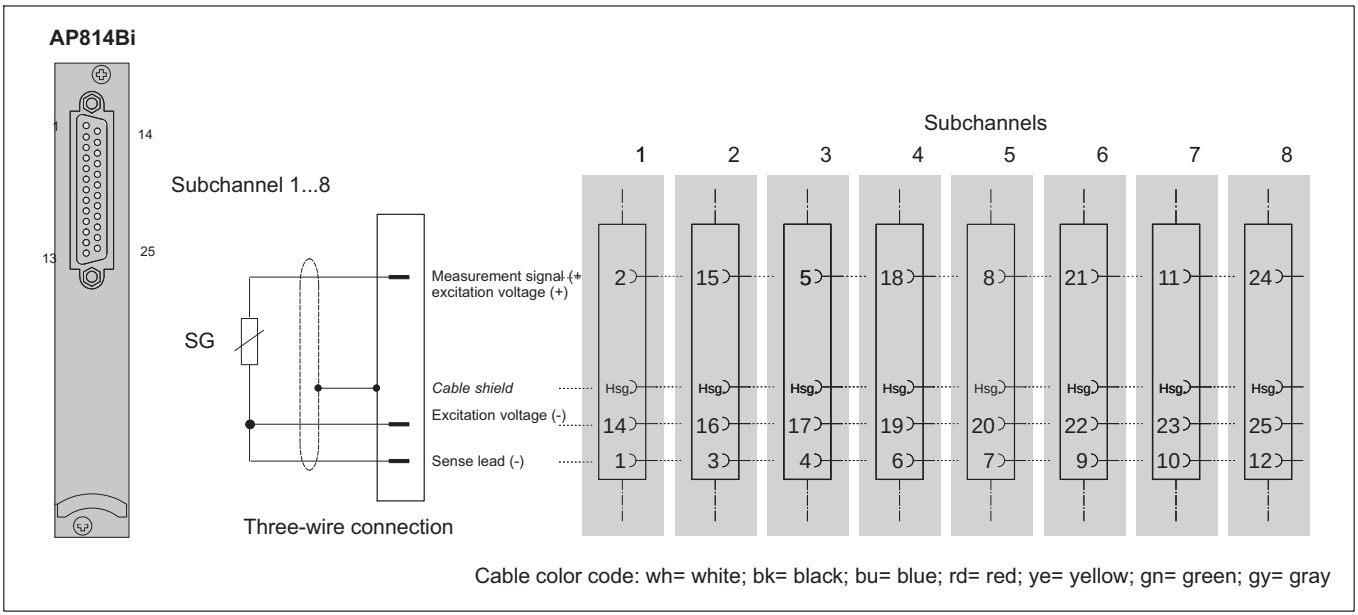

Important

If the strain gage is in a three-wire connection, symmetrical cables must be used to ensure that cable resistance is correctly compensated. Asymmetrical cables cause zero drift and change the sensitivity.

4.3.8.3 Single strain gage on AP815i

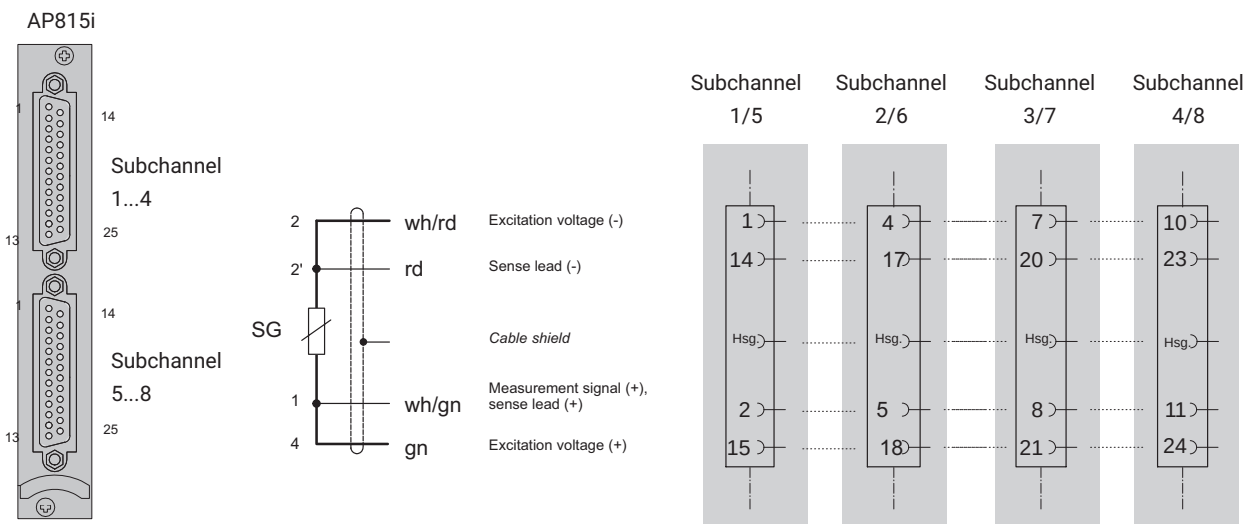

Cable color code: wh= white; bk= black; bu= blue; rd= red; ye= yellow; gn= green; gy= gray

4.3.9 SG chains and strain gage rosettes on AP815i

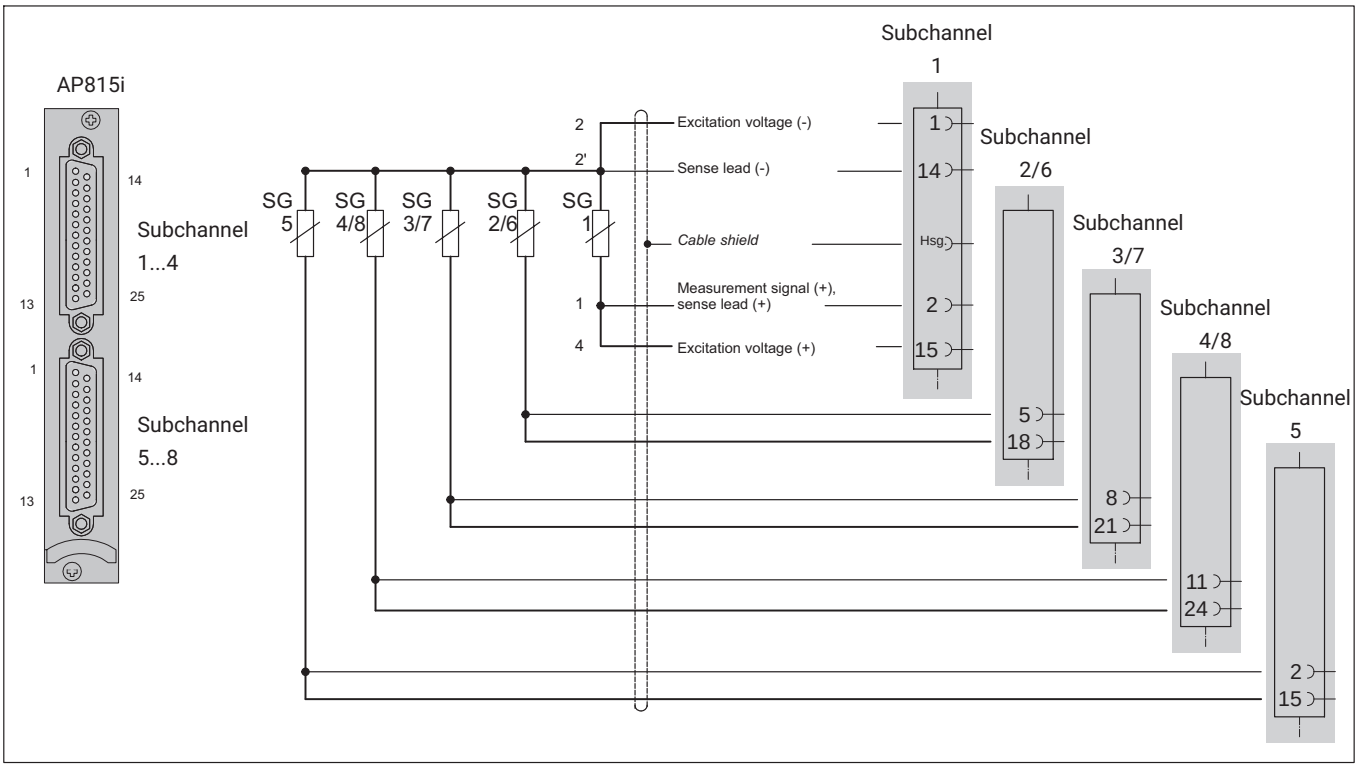

You can operate a maximum of eight SGs at 120 ohms with a 5-V current feed. Make certain that sensor point 2' of the SG chain is as close as possible for the individual strain gages and the distances between the individual strain gages are short.

If the distances between the individual strain gages cannot be kept small (for example two 90° strain gage rosettes in different places), they must be connected as follows:

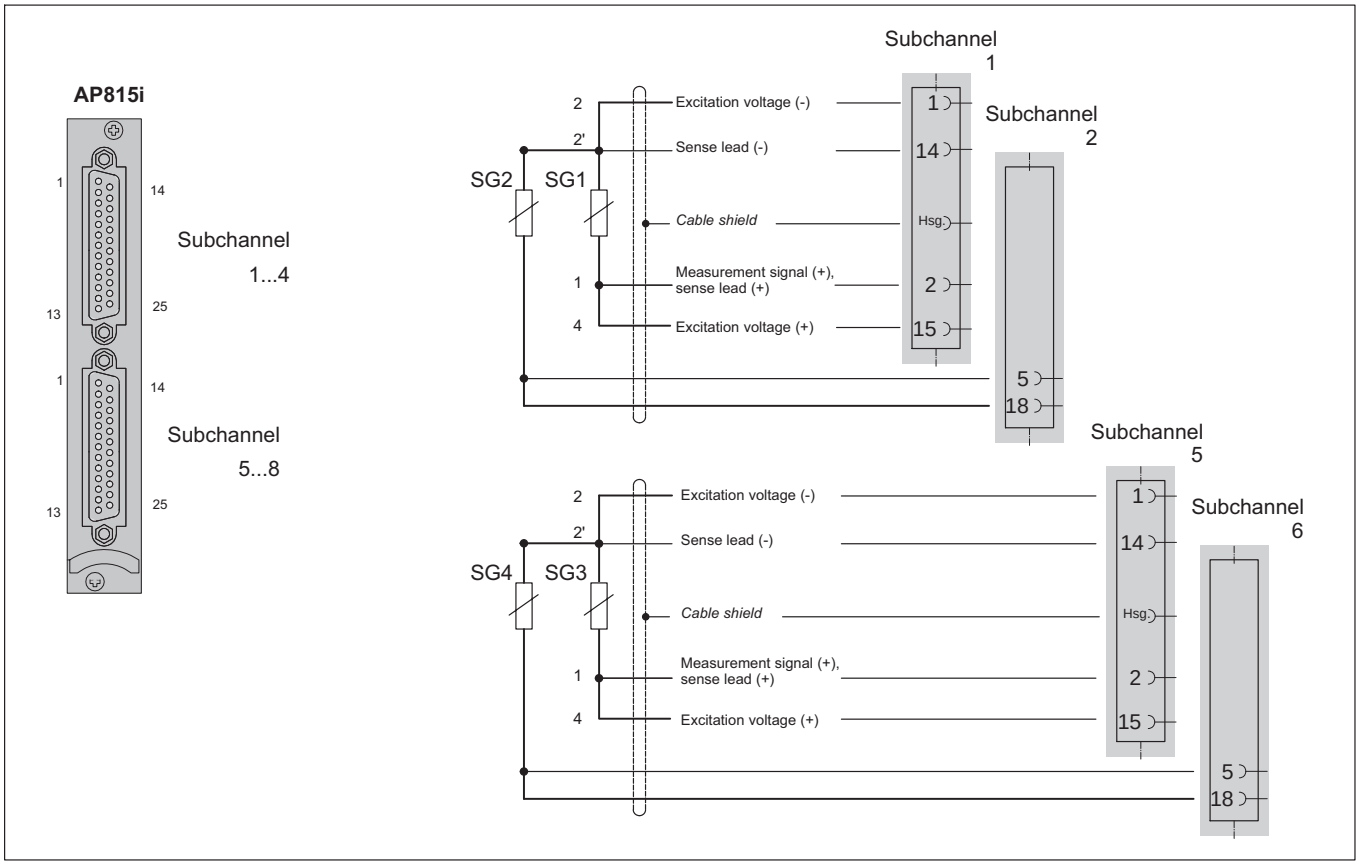
AP815i
1
14
13
25
Subchannel
1...4
1
14
13
25
Subchannel
5...8
Subchannel
1
Subchannel
2
2
2'
SG2
SG1
Excitation voltage (-)
Sense lead (-)
Cable shield
Measurement signal (+),
sense lead (+)
Excitation voltage (+)
1
4
1
14
Hsg
2
15
5
18
Subchannel
5
Subchannel
6
SG4
SG3

4.3.10 Torque flange (T10 serie, T12/T12HP, T40 serie)

4.3.10.1 Torque measurement

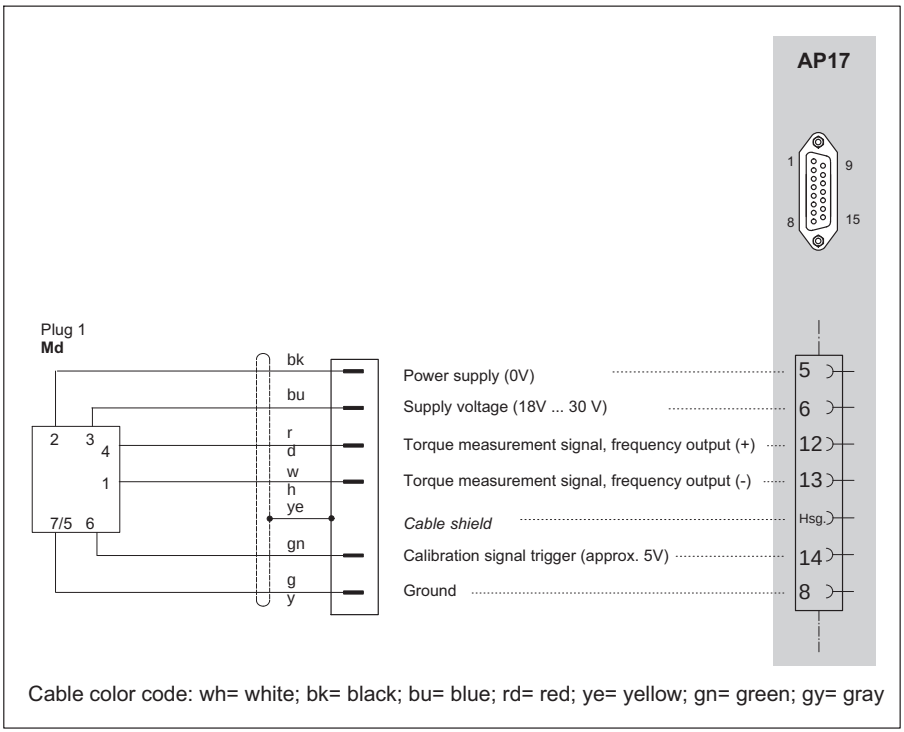

Cable color code: wh= white; bk= black; bu= blue; rd= red; ye= yellow; gn= green; gy= gray

4.3.10.2 Rotational speed measurement (symmetrical signals)

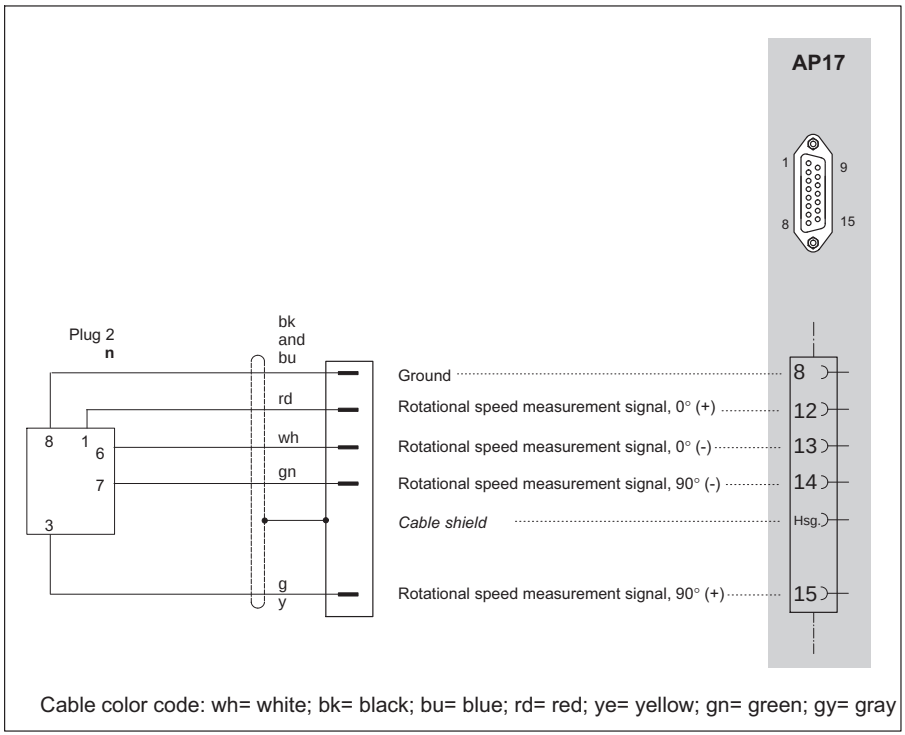

Cable color code: wh= white; bk= black; bu= blue; rd= red; ye= yellow; gn= green; gy= gray

4.3.10.3 Rotational speed measurement (symmetrical signals) with reference pulse

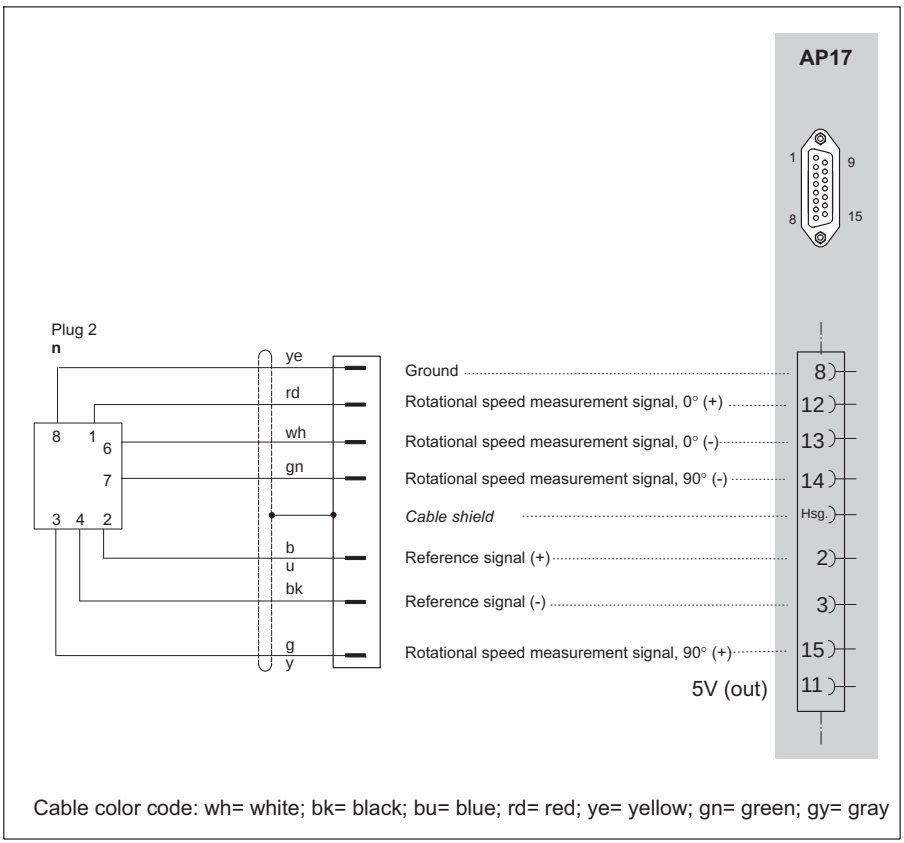

Cable color code: wh= white; bk= black; bu= blue; rd= red; ye= yellow; gn= green; gy= gray

4.3.11 Torque shaft (T4A, T5, TB1A)

4.3.11.1 Torque measurement (slip rings or direct cable connection)

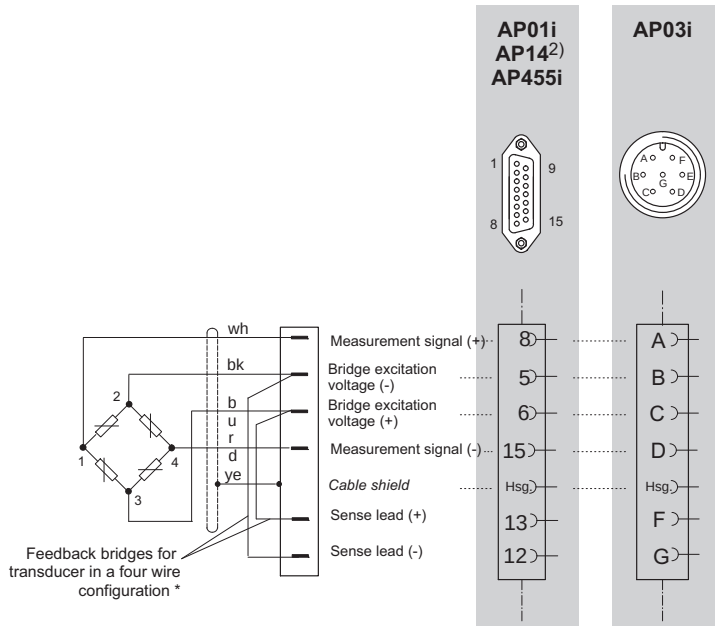

2) SG full bridge only

*) Transducer in a 6-wire configuration: see connection diagram page 44

Cable color code: wh= white; bk= black; bu= blue; rd= red; ye= yellow; gn= green; gy= gray

4.3.12 Thermocouples

Universal sockets made of copper are used beginning with hardware revision 3.00 to make it possible to connect different thermocouple types. Copper is softer than the miniature thermo connector of thermocouple type K, for example. The following points should therefore be considered:

- Proceed carefully when inserting the plug in the socket
  - Insert it at an angle as close as possible to perpendicular
  - If you can feel resistance, file the edges of the plug slightly to reduce the sharpness of the edges

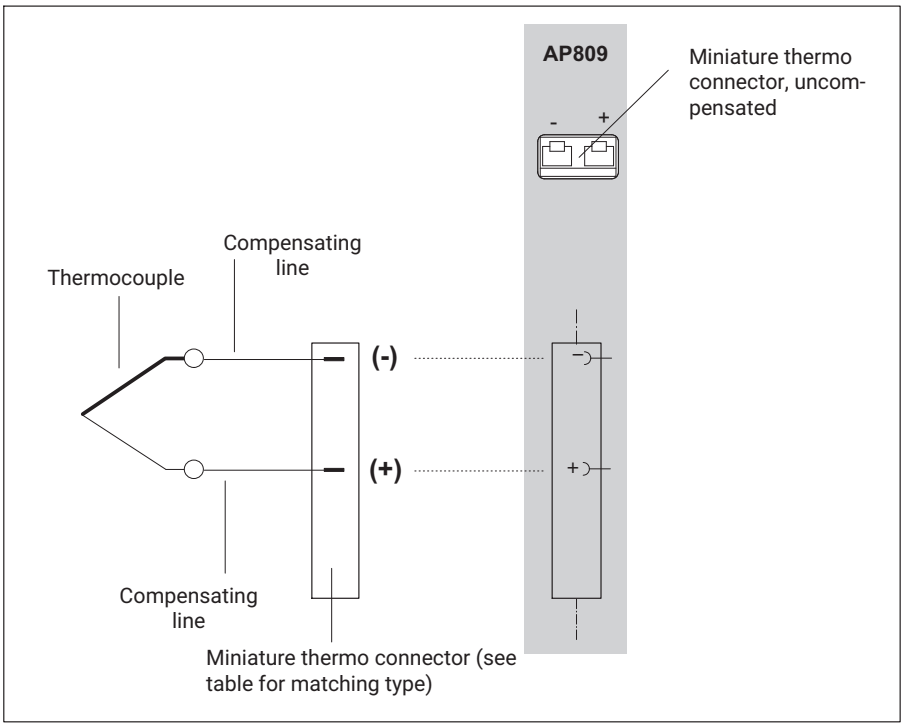

Type	Thermal material 1 (+)	Thermal material 2 (-)
J	Iron	Copper-nickel
K	Nickel-chrome (color code green)	Nickel-aluminum (color code white)
T	Copper	Copper-nickel

4.3.13 DC voltage sources

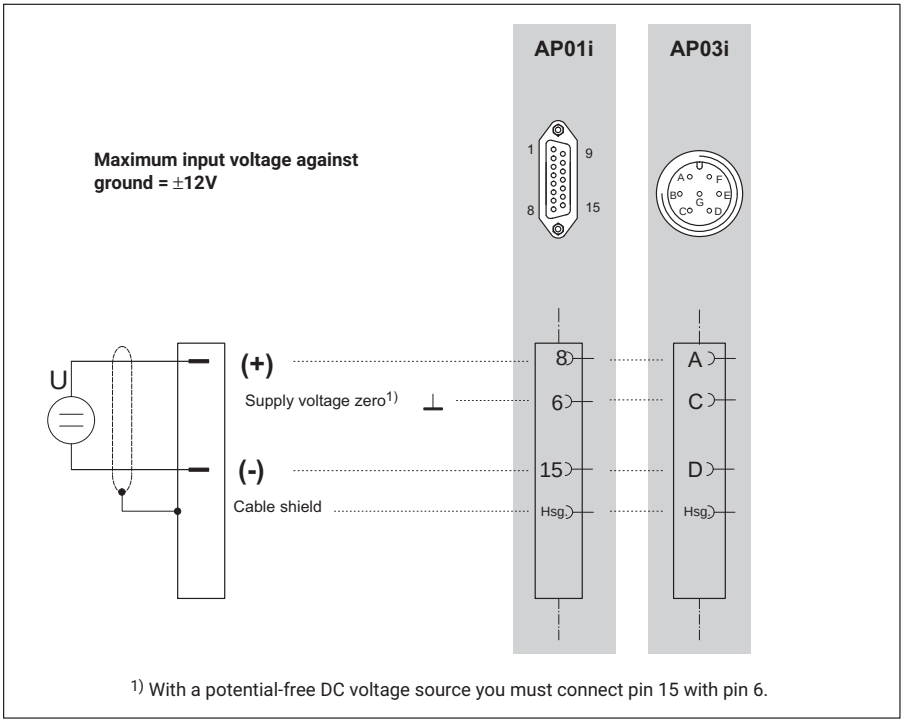

1) With a potential-free DC voltage source you must connect pin 15 with pin 6.

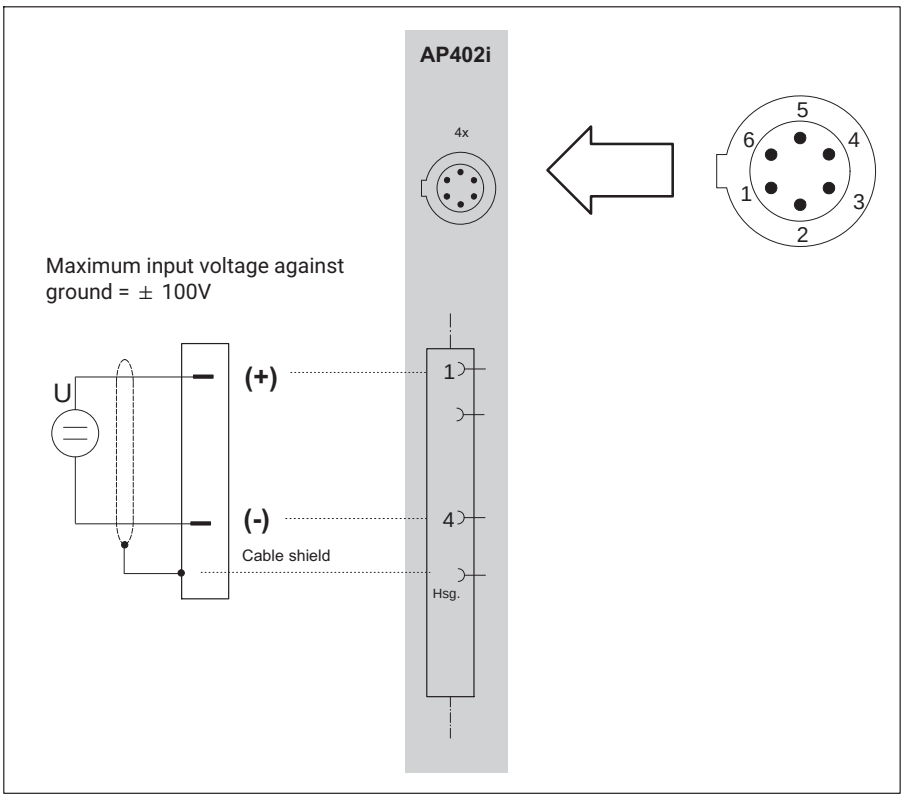
AP402i
4x
5
6
4
1
3
2
Maximum input voltage against ground = ± 100V
U
(+)
(-)
Cable shield
1
4
Hsg.

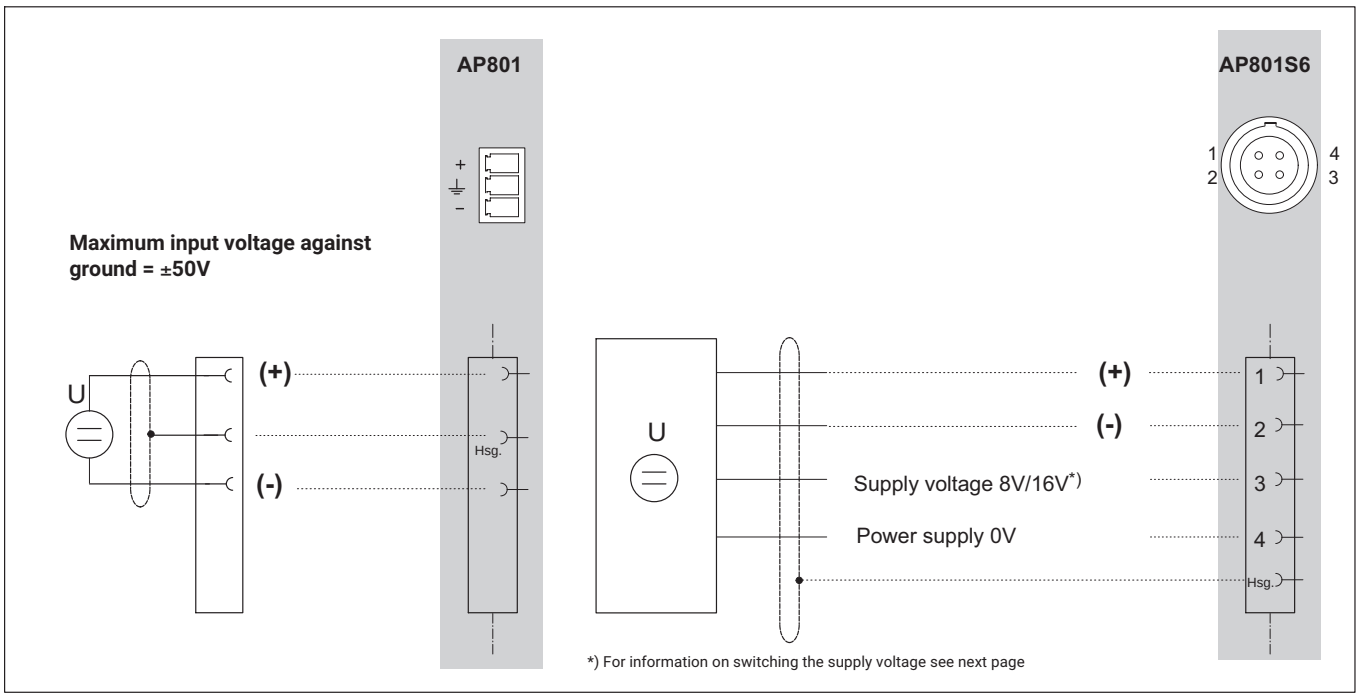
AP801
AP801S6
+
–
1
2
4
3
Maximum input voltage against ground = ±50V
U
(+)
(-)
Hsg.
U
(+)
(-)
Supply voltage 8V/16V*)
Power supply 0V
1
2
3
4
Hsg.
*) For information on switching the supply voltage see next page

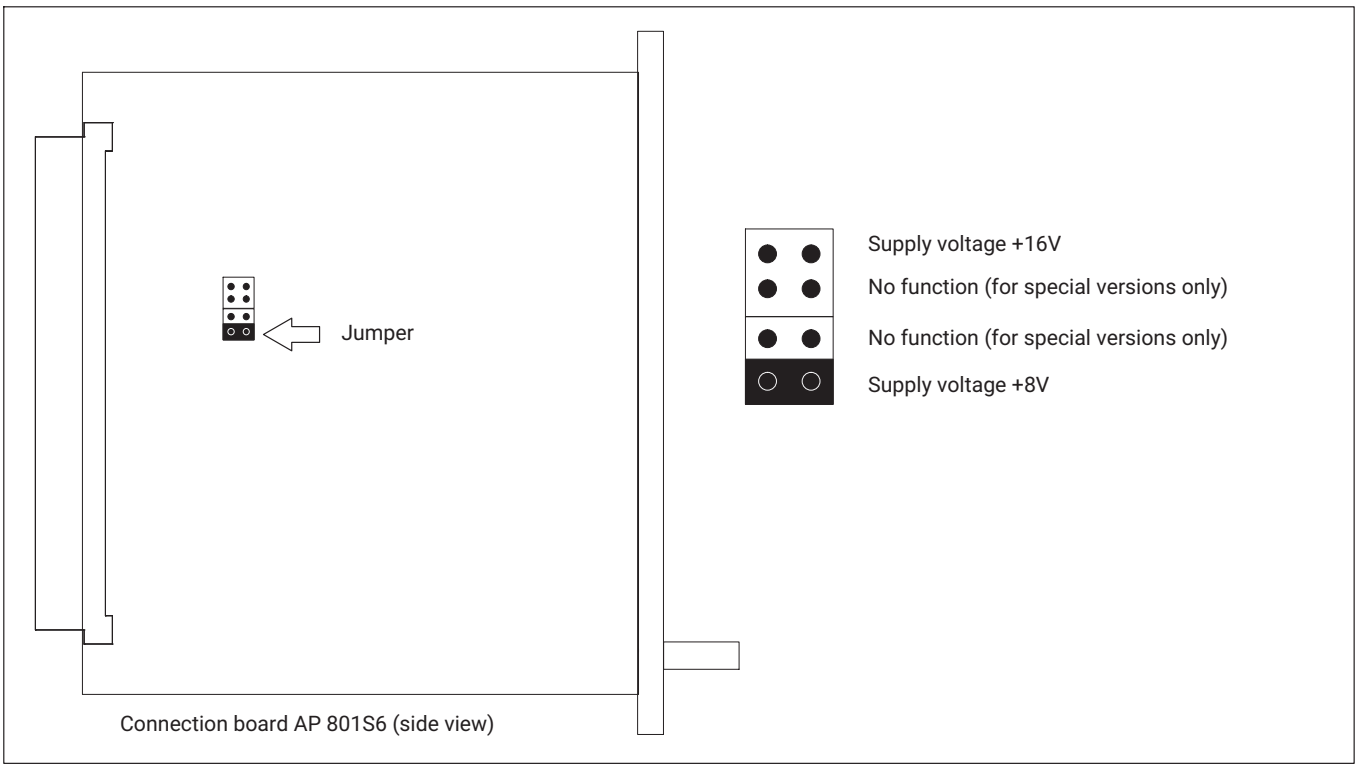

Connection board AP 801S6 (side view)

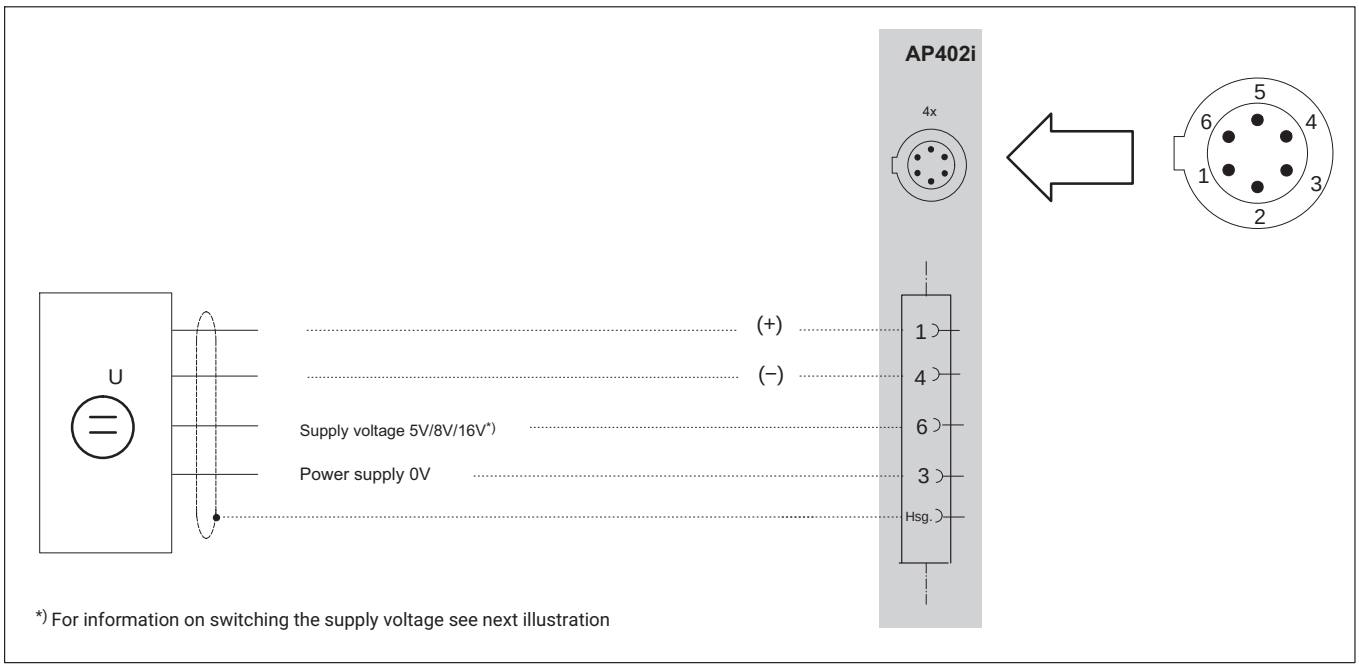

*) For information on switching the supply voltage see next illustration

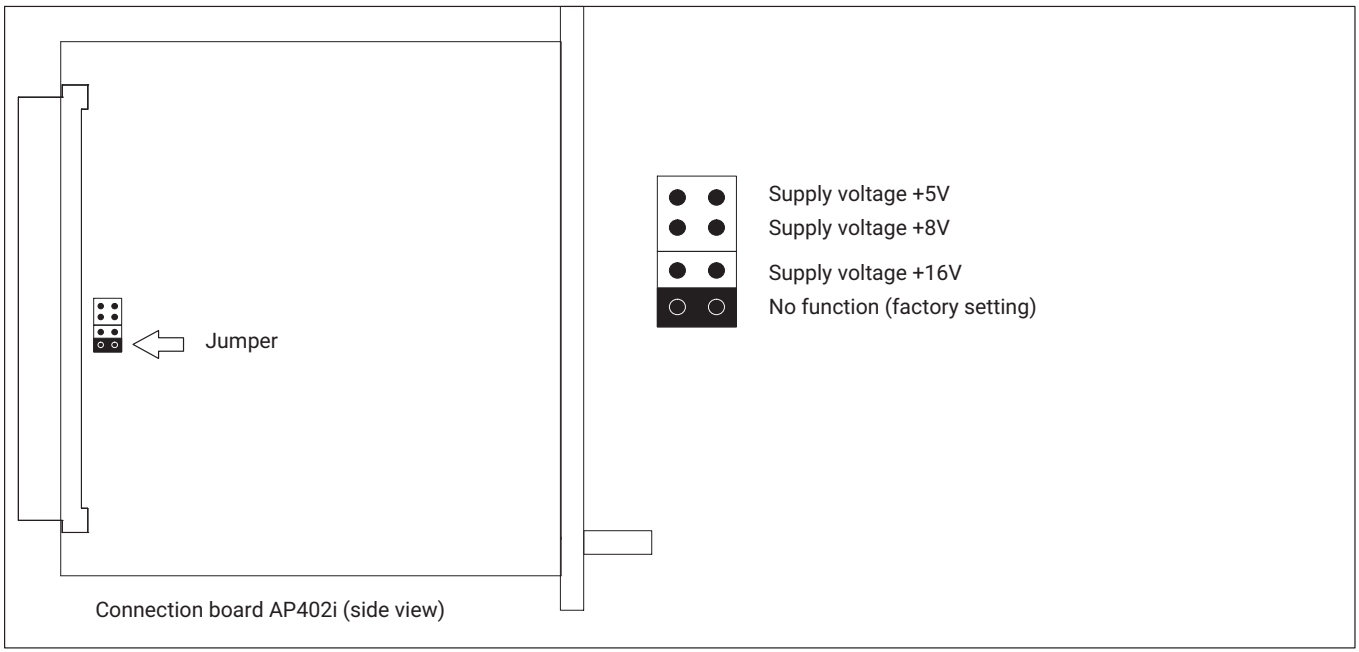

Connection board AP402i (side view)

AP836i

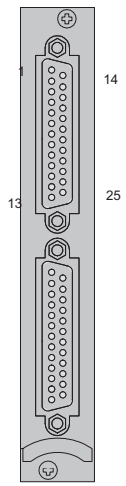

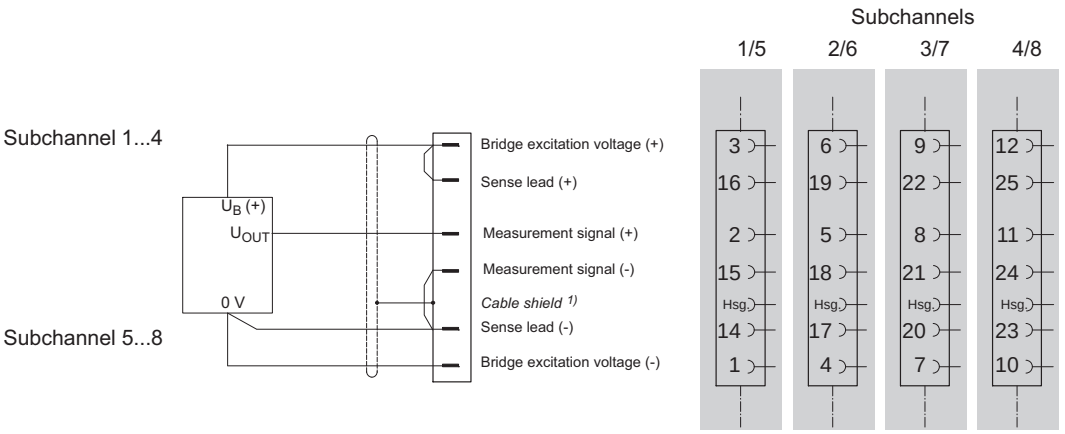

Common signal and supply voltage zero, power line not corrected on one side.

Since the bridge excitation voltage used to supply the active transducer is symmetrical to GND/ground, the design of the active transducer must without exception be potential-free!

AP836i

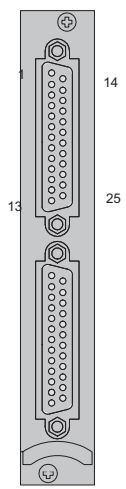

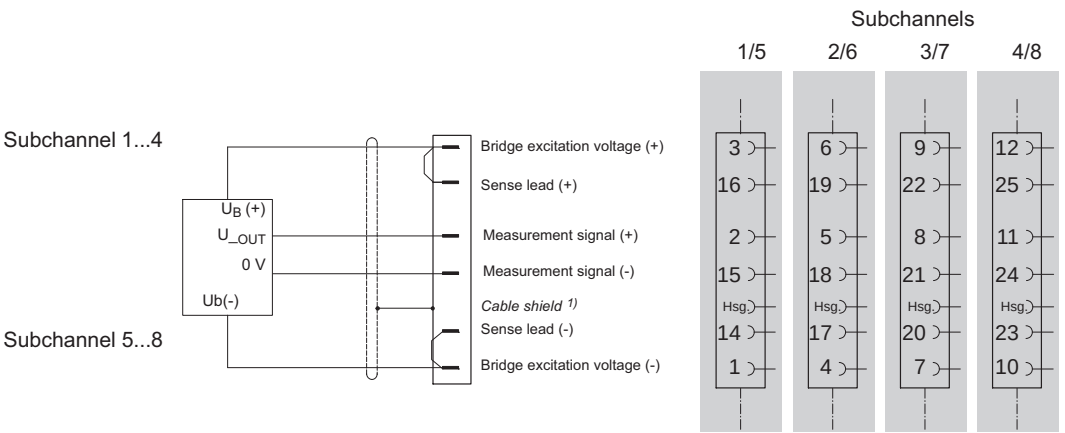

Separate signal and supply voltage zero, power lines not corrected

Since the bridge excitation voltage used to supply the active transducer is symmetrical to GND/ground, the design of the active transducer must without exception be potential-free!

AP836i

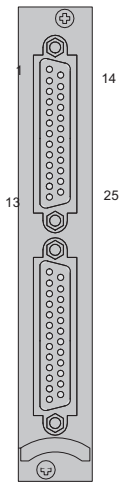

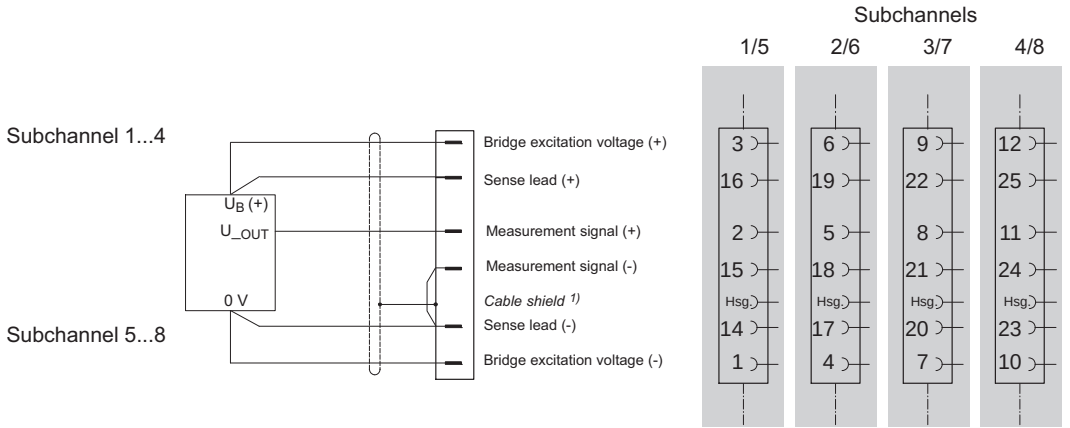

Common signal and supply voltage zero, power lines fully corrected.

Since the bridge excitation voltage used to supply the active transducer is symmetrical to GND/ground, the design of the active transducer must without exception be potential-free!

AP836i

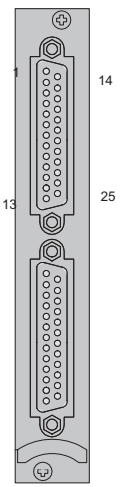

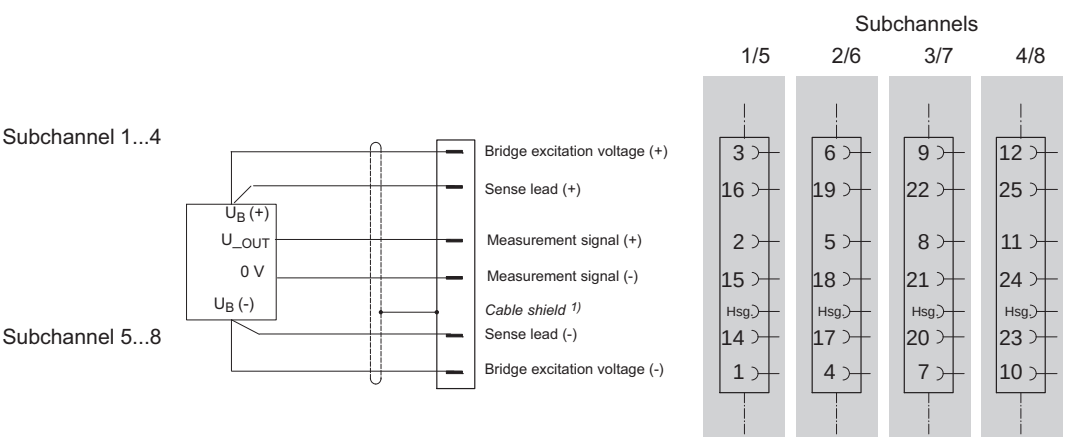

Separate signal and supply voltage zero, power lines fully corrected.

Since the bridge excitation voltage used to supply the active transducer is symmetrical to GND/ground, the design of the active transducer must without exception be potential-free!

4.3.14 DC current sources

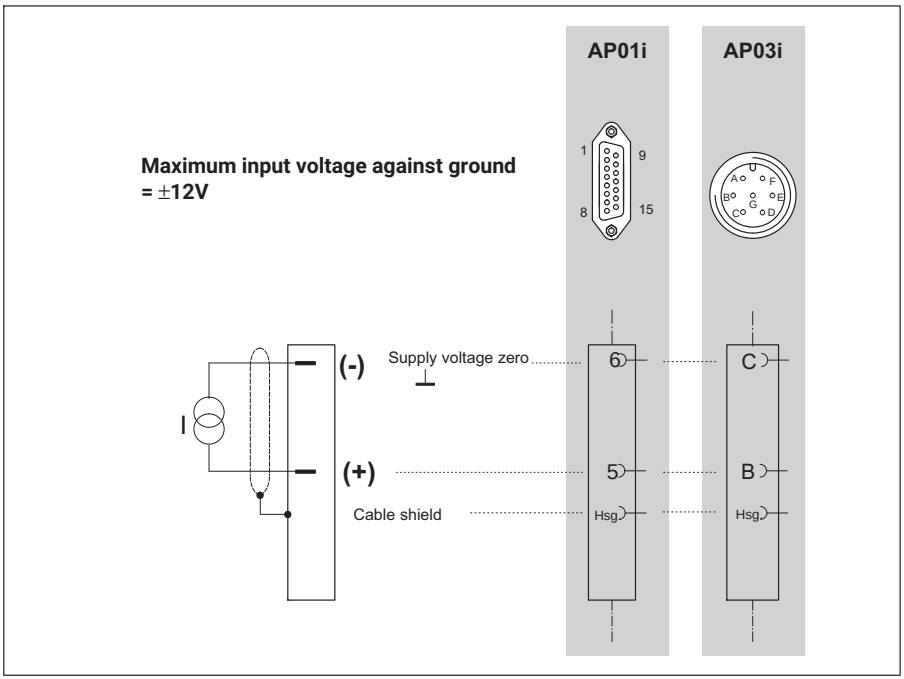

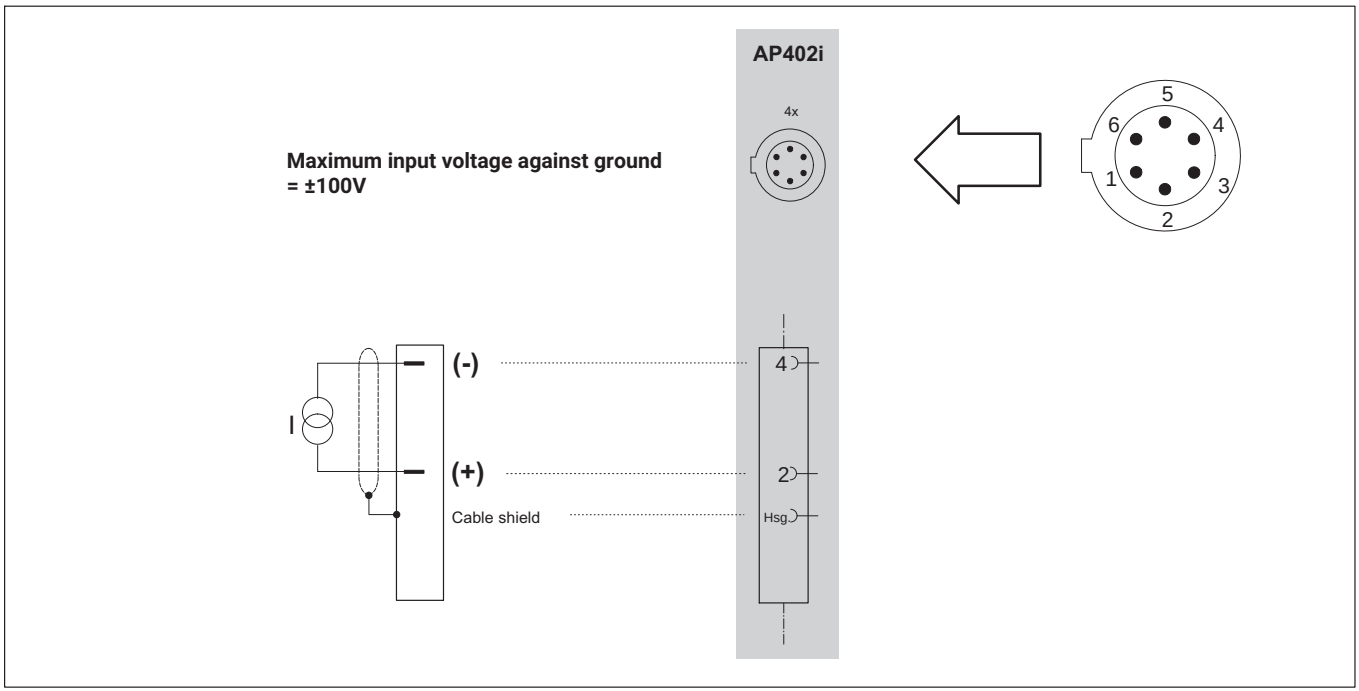
AP402i
4x
Maximum input voltage against ground
= ±100V
5
6
4
1
3
2
I
(-)
(+)
Cable shield
4
2
Hsg

4.3.15 Resistors, Pt100

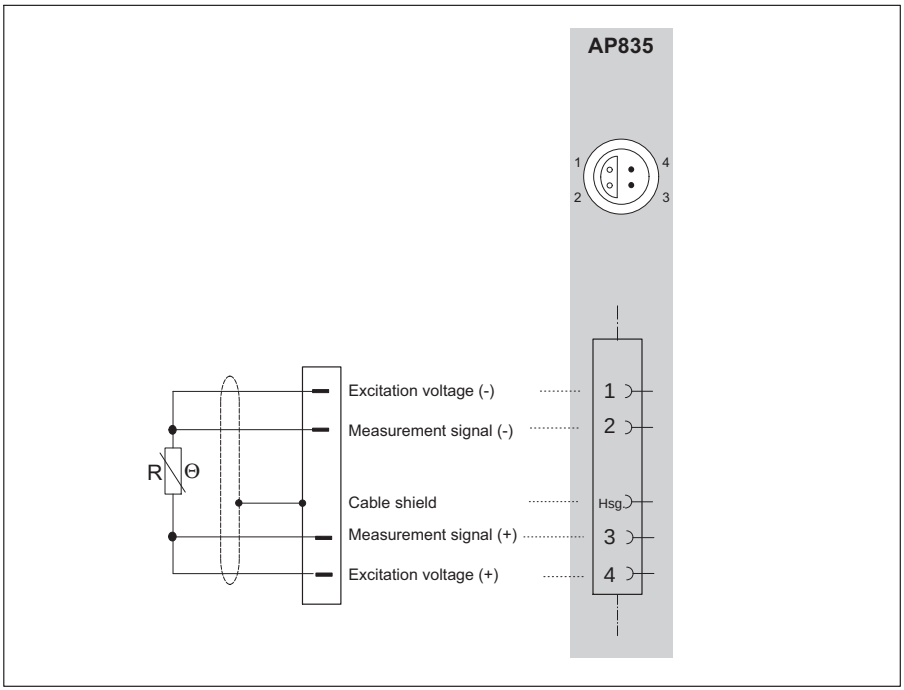

4.3.16 Frequency measurement without directional signal

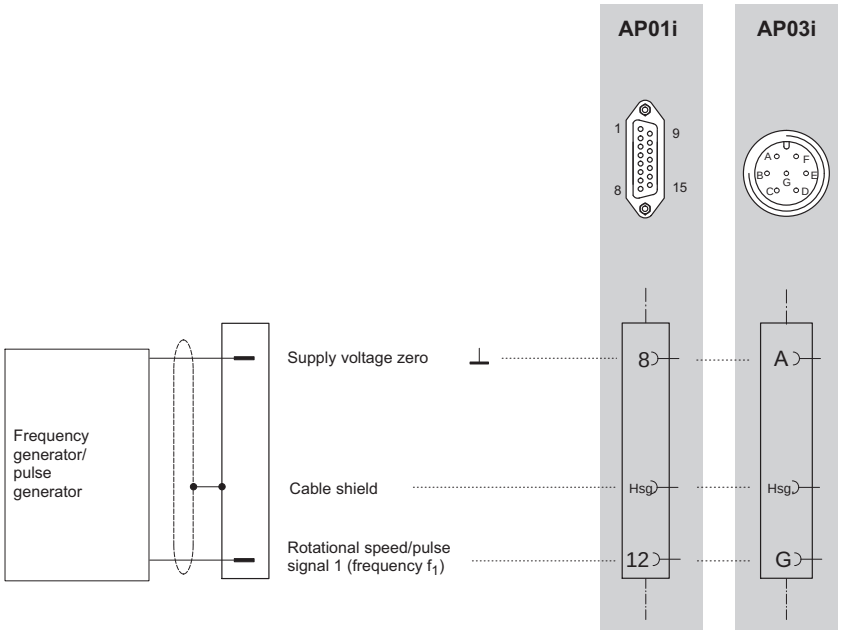

Deactivate the analysis of the f_2 signal in this mode (factory setting: Off), *see page 152*.

4.3.17 Frequency measurement with directional signal

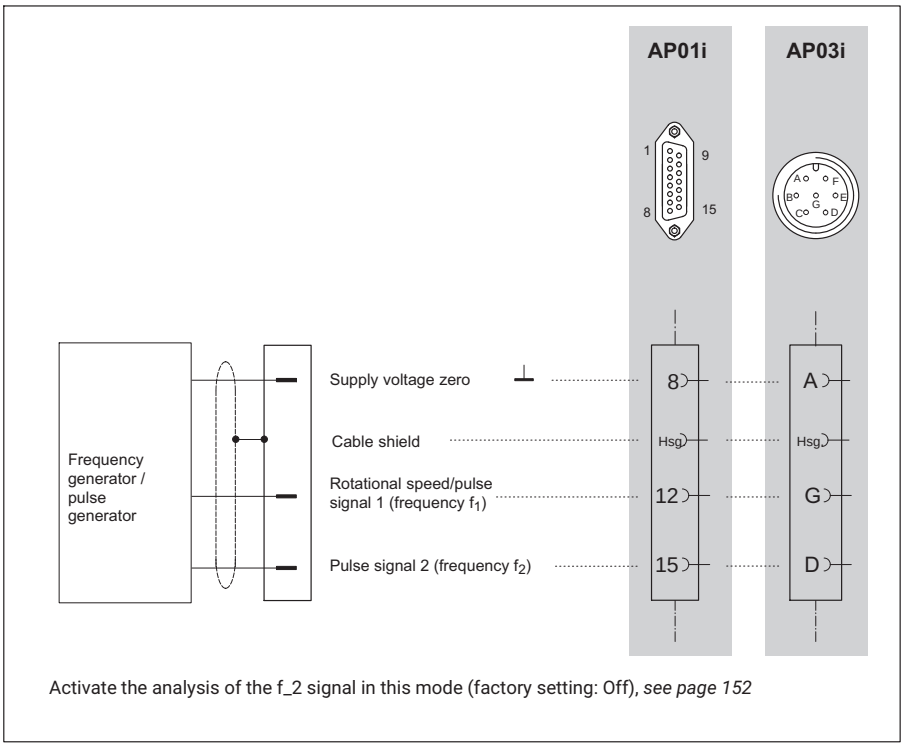

Activate the analysis of the f_2 signal in this mode (factory setting: Off), *see page 152*

4.3.18 Pulse counting, single-pole

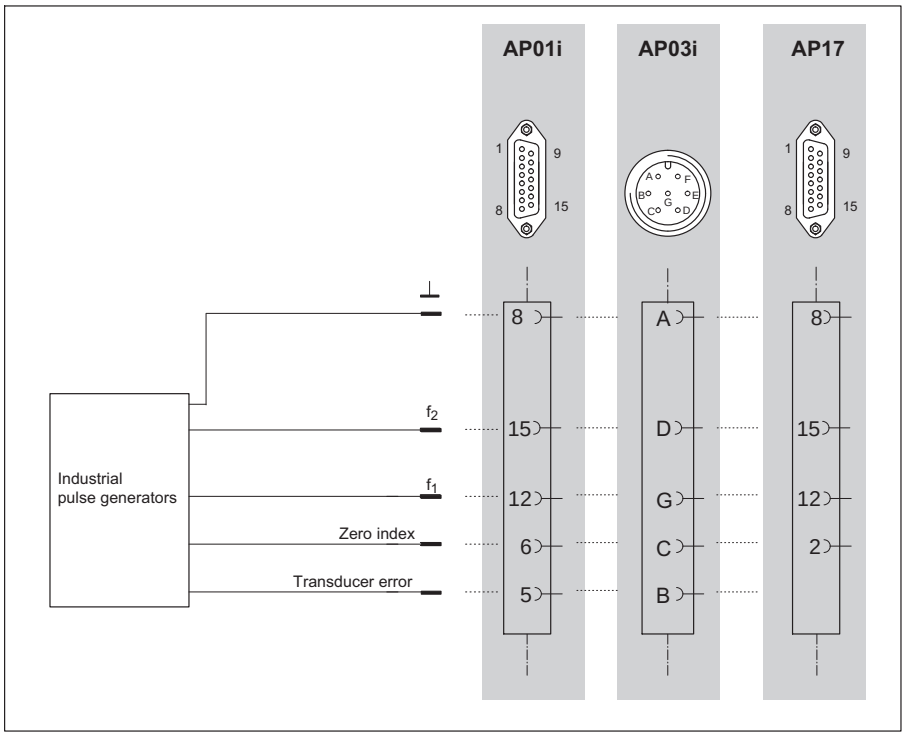

4.3.19 Pulse counting, differential

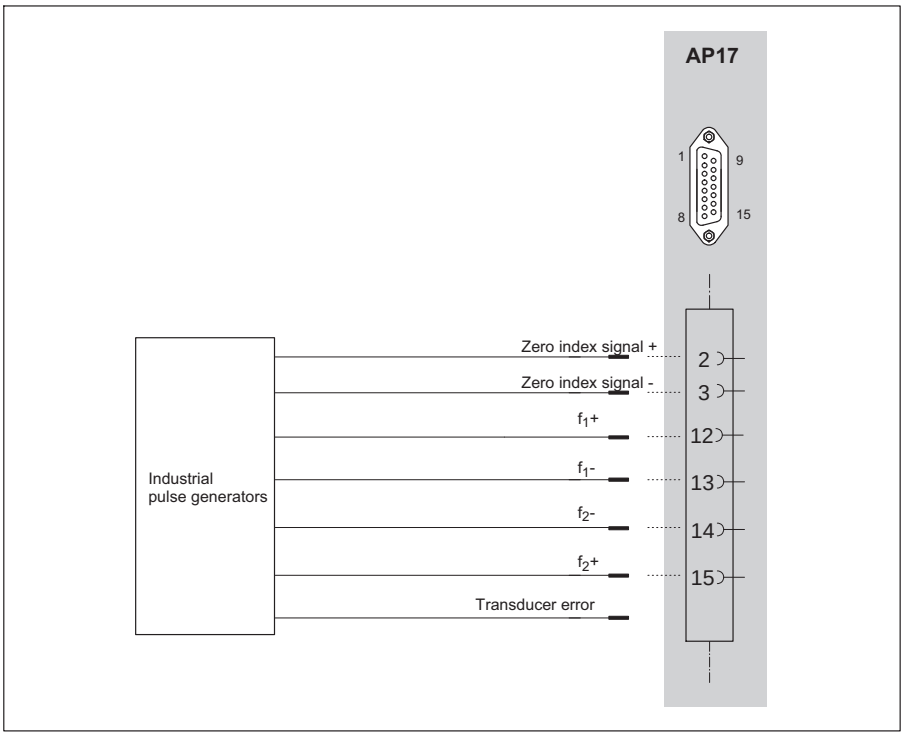

4.3.20 Active piezoelectric transducers

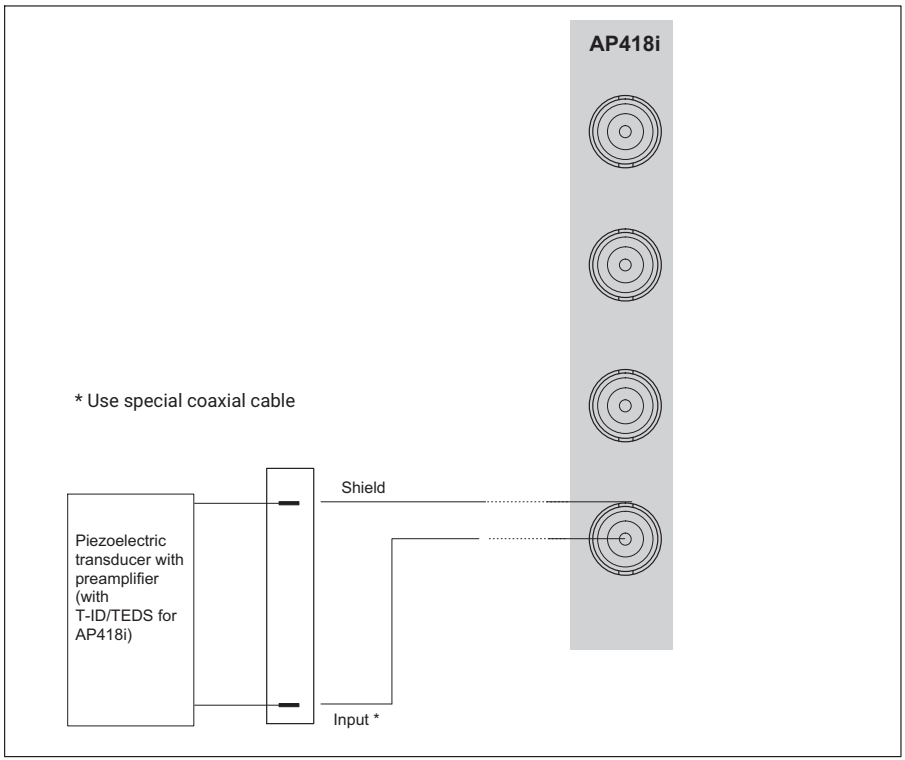

Information

Information about AP418i connection boards:
When laying transducer cables outside of enclosed areas or with cable lengths greater than 30 m between the connection board and transducer, the sensor cables must be designed with an additional, separately grounded shield to ensure overvoltage protection. This can be done for example by laying the cable in a metallic pipe or using double-shielded cable, in which case the outer shield must be connected to ground potential or protective conductor potential where it is close to the connection board (for example where it enters the switch cabinet). HBM recommends Triaxial cable for this purpose.

4.3.21 Piezoresistive transducers

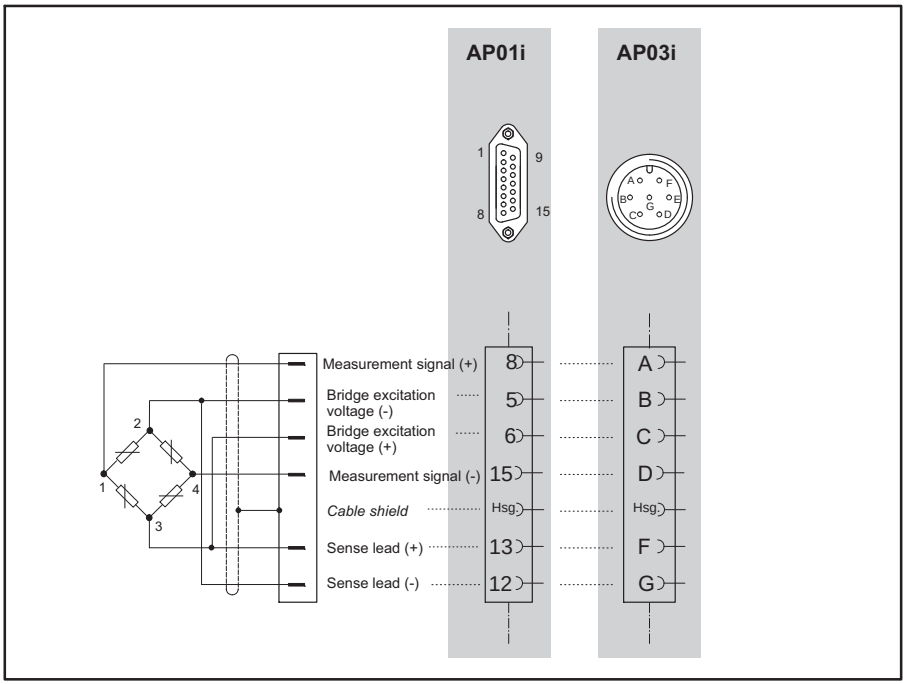

4.3.22 Potentiometric transducers

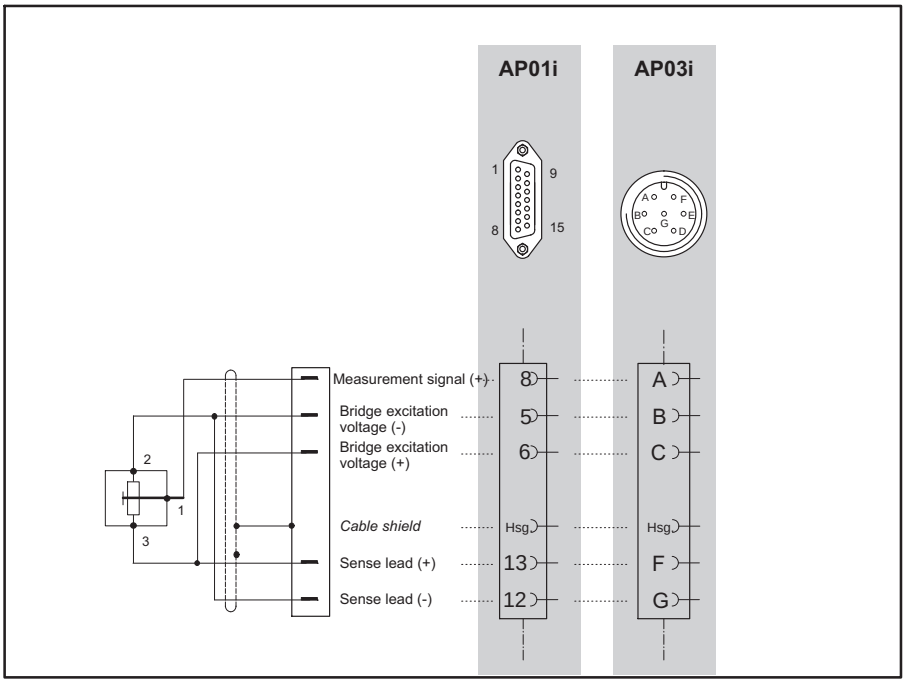

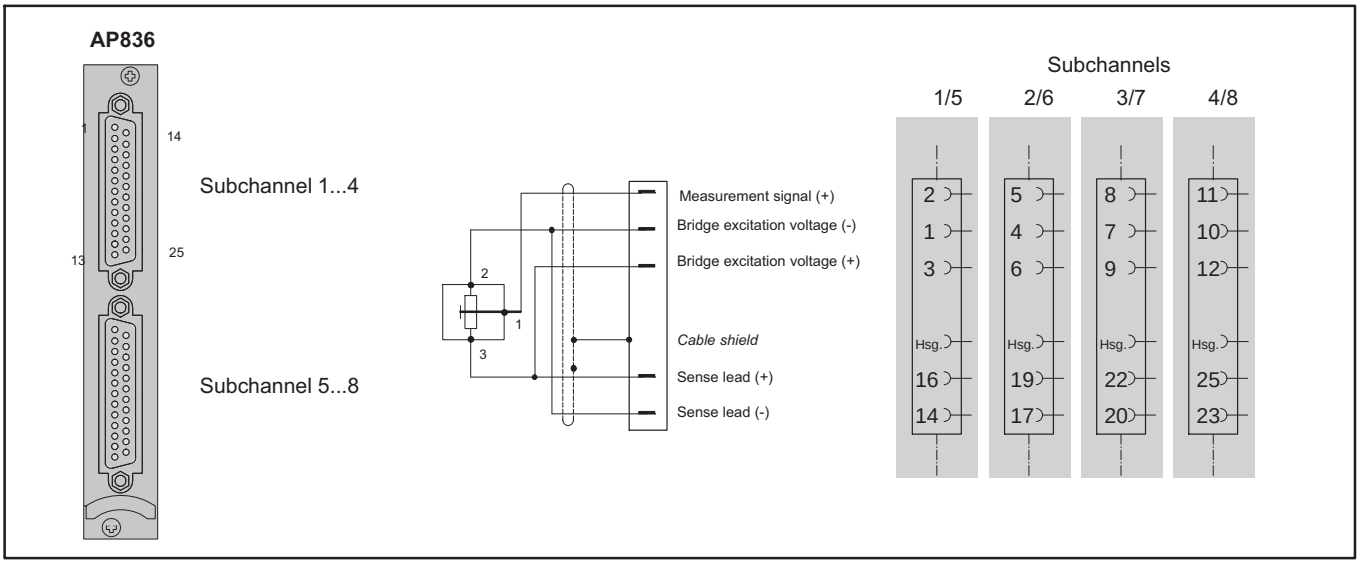

4.3.23 Connection via the distributor board VT810/815i

Single SG; four-wire connection, AP815i only

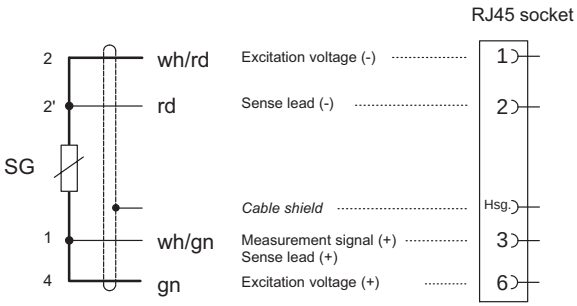

Strain gage half bridge on (AP810i) on VT810/815i

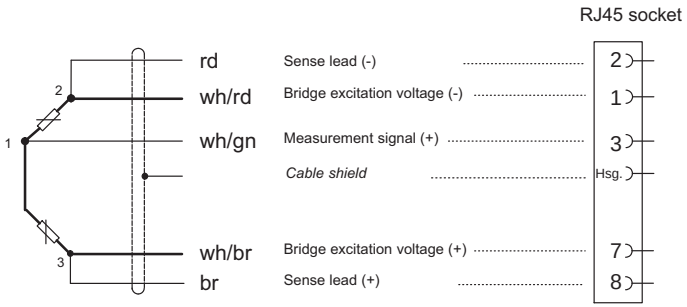

SG full bridge circuit

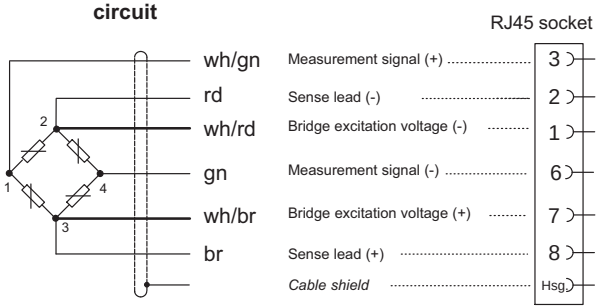

Strain gage half bridge on (AP815i) on VT810/815i

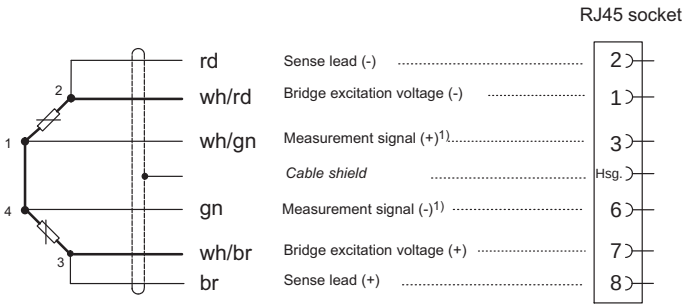

The color code refers to 1-KAB156-3.

1) With decentralized half bridge circuits the measured value must be acquired at both ends of the connecting line between the active SGs. With standard half bridge circuits a connector can also be bridged.

Connecting diagram

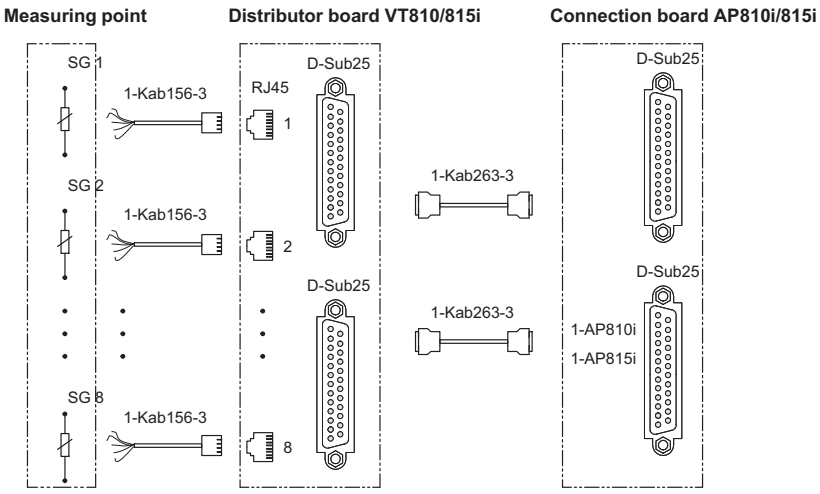

Extensive connection instructions are enclosed with the distributor board.

4.4 Connecting CANHEAD modules

To connect CANHEAD modules to the MGCplus system you need the ML74B communication card and the AP74 connection board. In combination with the NT030 power pack, you can connect a maximum of 12 modules per board and a maximum of 25 modules per MGCplus device (a maximum of 256 channels per CP42 and 512 channels per CP52 in total). The combination of NT040 with CP52 enables up to 50 modules per MGCplus device to be connected. For further information regarding connection and operation see the "CANHEAD" operating manual.

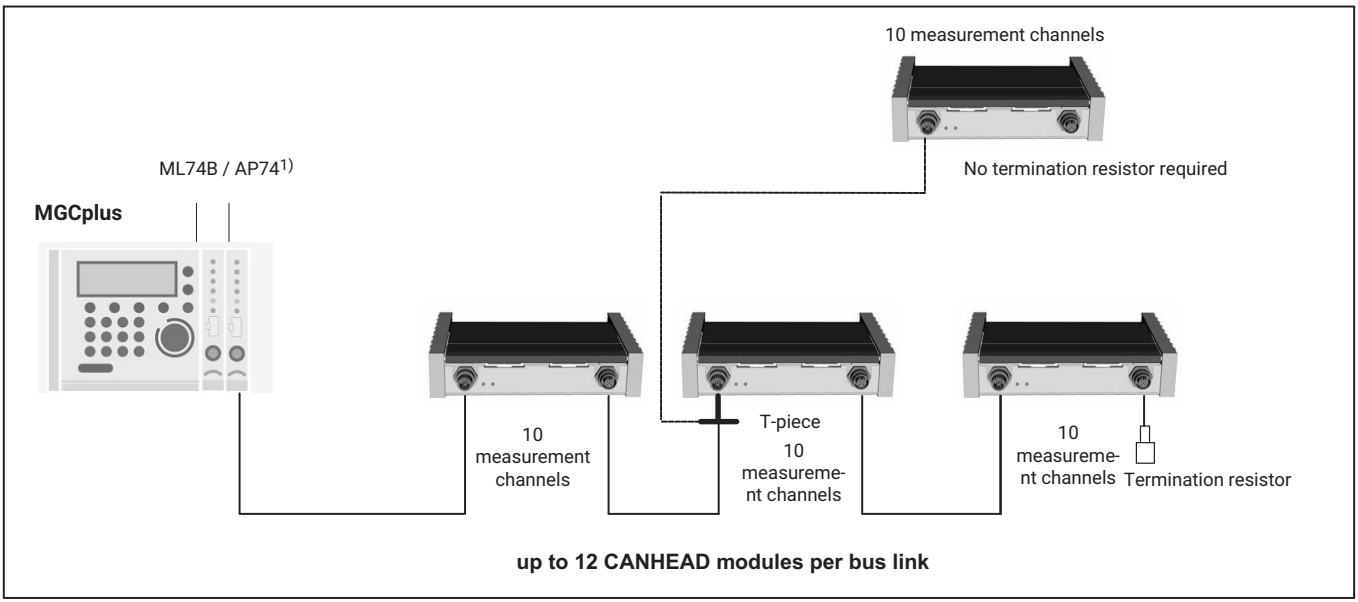

Fig. 4.5 Connection to MGCplus

The T-piece 1-CANHEAD-M12-T is used when a branch circuit will be created.

1) The AP74 connection board in the MGCplus contains a built-in termination resistor.

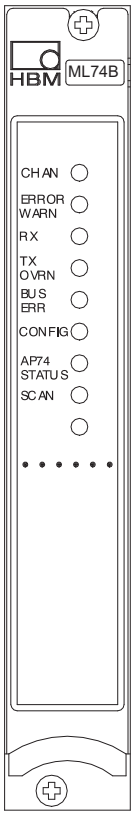

4.4.1 Communication card ML74B

LED	Labeling	Color	Meaning
1	CHAN.	Yellow	Channel is selected.
2	ERROR/WARN.	Red	Error/Warning
3	Rx	Yellow	CAN protocol being received
4	Tx OVRN	Yellow Red	CAN protocol being sent Overrun occurred
5	BUS-/ERR	Red	Bus error
6	CONFIG	Yellow	The assigned CANHEADS are being set up
7	AP74 STATUS	Yellow Off Red	Power supply via AP74 No power supply via AP74 Error in power supply via AP74
8	SCAN	Yellow	Bus scan is being performed
9	-	-	-

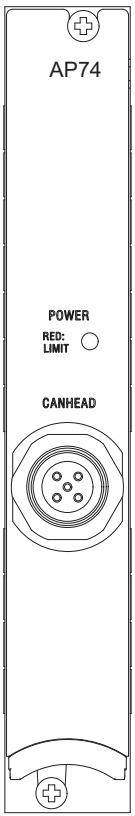

4.4.2 AP74 connection board

LED color	Meaning
Green	Normal status in operation
Red	Short circuit or force overshoot
None	Power supply turned off

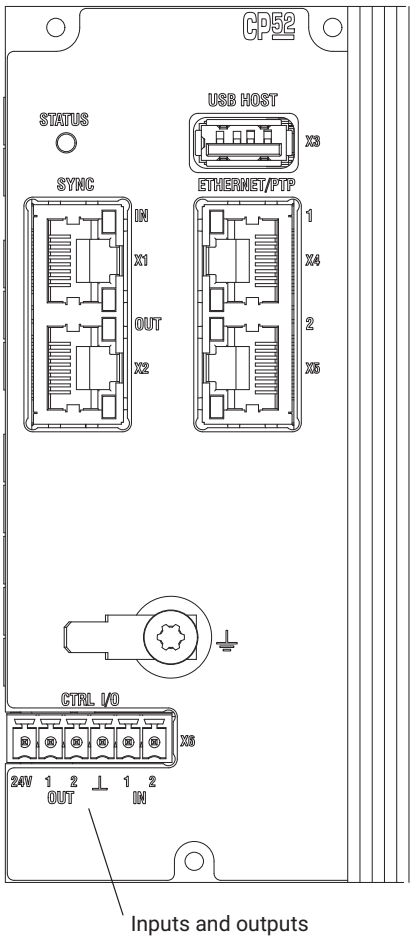

Inputs and outputs

4.5 Inputs and outputs, remote controls

4.5.1 Inputs/outputs of the CP52

The CP52 communication processor has two digital inputs and outputs each. The digital inputs and outputs must be operated with an external current feed (12 V ... 24 V). Shielded cables are used for EMC reasons.

Inputs (0 V ... 24 V)

You can assign the following functions to the digital inputs:

- Start to record measured data with an external trigger

The status of the inputs and outputs can also be queried with the MGC*plus* terminal commands.

Outputs (0 V ... 24 V)

The following functions are assigned to the digital outputs:

- Disk is full

If the remaining storage space of the USB mass storage medium in the CP52 is 1 Mbyte, the output is set to logical High. The status can be changed using the MGC*plus* terminal commands.

- System is up and running

When the initialization is completed and measured values are acquired, the output is set to logical High.

Notice

Functions can only be assigned to the digital inputs and outputs of the CP52 communication processor by using the MGCplus Assistant software from HBM.

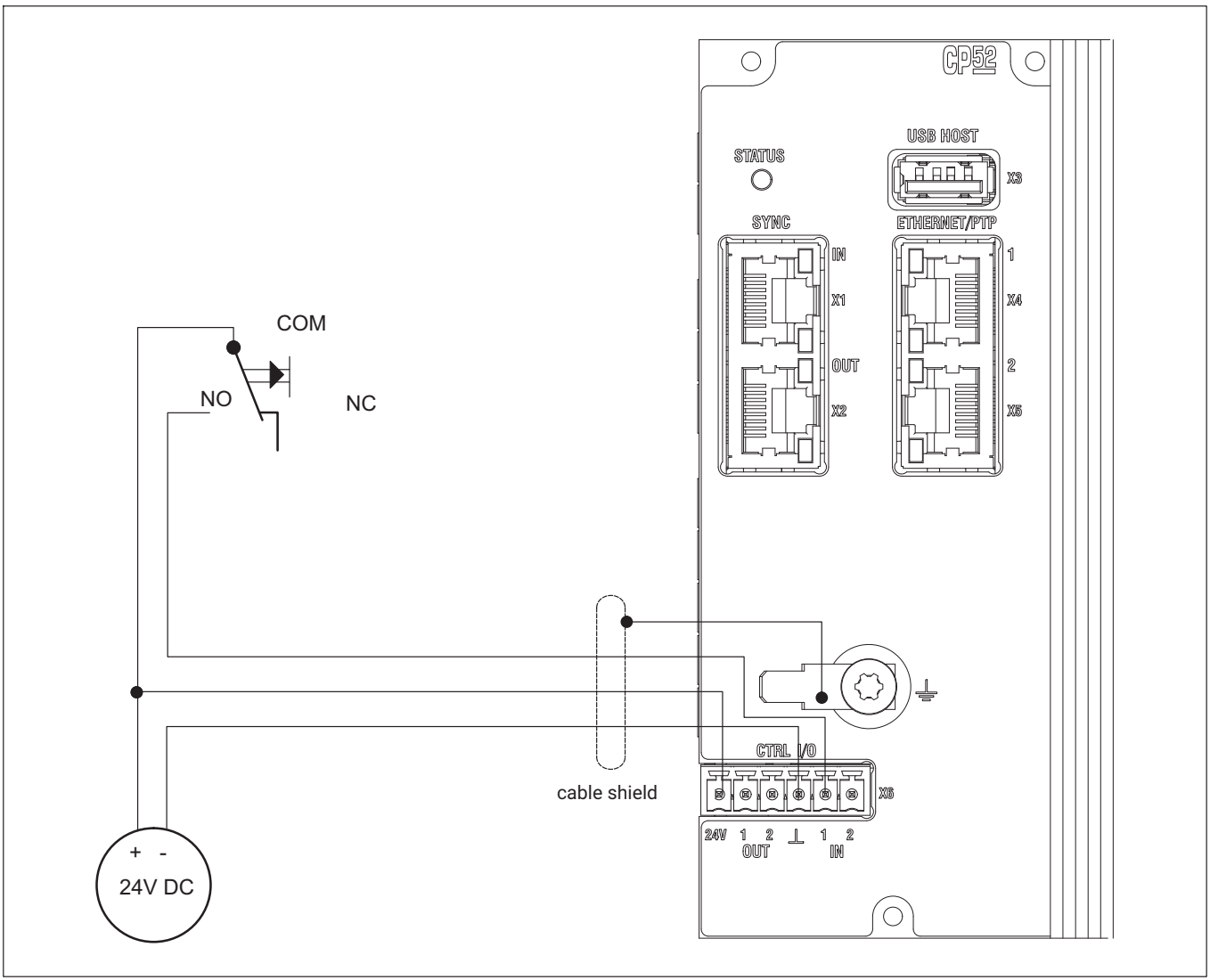

Fig. 4.6 Wiring example for the "Start Trigger" function at the CP52 control inputs

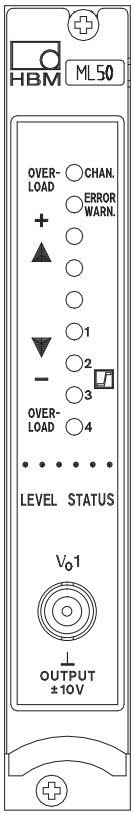

4.5.2 Analog output on the front panel

On the front panel of a single-channel module there is a BNC socket for the analog output signal V_{O1}. (This socket is used for test purposes. Stationary wiring should always be done with the connection boards, since there is no noise voltage with this method).

Notice

Please note: The input resistance of the connected device must be greater than 1MΩ.

When connecting a coaxial cable to the analog output of the ML60B amplifier module, a ferrite (available from Würth, art. no. 742 711 72, or similar) must be placed on the cable for operation in environments of limit value class B in accordance with EN55011 and EN55022 (residential applications, business and commercial applications as well as small businesses).

4.5.3 Connection boards AP01i/AP03i/AP14/AP17

In addition to the transducer connection, the connection boards also provide several output and control signals, depending on the option selected.

They are explained in greater detail in the following sections.

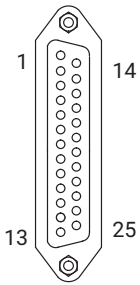

Sct 2
Outputs
OUTPUT

4.5.3.1 Socket assignment AP01i/AP03i/AP14/AP17

Pin	Function	
1	⊥ Digital	
2	Remote control 1	Input
3	Remote control 2	Input
4	Remote control 3	Input
5	Remote control 4	Input
6	Remote control 5	Input
7	Remote control 6	Input
8	Remote control 7	Input
9	Remote control 8	Input
10	no function	-
11	no function	-
12	V_{O2} (Ra>5kΩ)	Output
13	V_{O1} (Ra>5kΩ)	Output
16	⊥ Digital	Input
17	Limit value output 1	Output
18	Limit value output 2	Output
19	Limit value output 3	Output
20	Limit value output 4	Output
21	Warning	Output
22	no function	-
23	no function	-
24	⊥ Analog to Pin 12	
25	⊥ Analog to Pin 13	

Tab. 4.1 Sct2

Assignment of outputs

Analog outputs

- On *pin 12* the analog output signal V_{O2} is present.

  The connected load resistor must be greater than 5 kohms.

- On *pin 13* the analog output signal of V_{O1} is present (and also on the BNC socket on the front panel).
  The connected load resistance must be greater than 5 kohms.

The following signals can be assigned to outputs VO1 and VO2:

- S1: Gross
- S2: Net
- S3: Peak value 1
- S4: Peak value 2
- S5: various differential, integration and mean value
- On *pins 17 to 20* the switching states of limit switches 1...4 are present. The switching states are indicated by two different HCMOS voltage levels:

  Positive logic:

  Level 0 V: limit switch OFF

  Level 5 V: limit switch ON
- On *pin 21* a level of 5 V (High level) is present, which can be used as a warning signal. In case of a fault or broken transducer cable the output signal is set to 0 V (Low). However, this signal is also set to zero during the autocalibration cycle (every 5 minutes for about 1 s).

Remote controls

On *pins 2 to 9* of socket 2, remote controls *CTRL 1...8* are present for control of some amplifier functions. These contacts are active if they have been enabled with the AB22A display and control unit, i.e. in REMOTE operating mode. The assignment of these remote controls is freely selectable. The possible functions are described in section *8 Additional functions* .

Information

In the factory settings the contacts are not assigned.

External triggering

Remote control 7 is used as an external trigger input.

With AP01i and AP03i, jumpers can be used to adapt the filter settings of the two analog outputs follows:

Analog output filtering

With AP01i and AP03i, jumpers can be used to adapt the filter settings of the two analog outputs follows:

Filter approx. 3 kHz approx. 2. order	**Analog output V_{O1}**	**Analog output V_{O2}**
OFF for ML10B	**ST1**	**ST6**
On for all others MLxx	**ST1**	**ST6**

Additional instructions for AP17

Pin assignment of the input socket

Pin	Function	I/O
1	Shield	
2	Zero index (+)	Input
3	Zero index (-)	Input
4	Ground	
5	Transducer supply voltage -16 V (max. 500 mA) [1)]	Output
6	Transducer supply voltage +16 V (max. 500 mA) [1)]	Output
7	Not assigned	
8	Ground	
9	SDA for XM001 external memory module	Input
10	SLC for XM001 external memory module	Output
11	Transducer supply voltage 5 V (max. 300 mA) [1)]	Output
12	F1+ rotational speed 0°, angle of rotation, torque, frequency	Input
13	F1- rotational speed 0°, angle of rotation, torque, frequency	Input

Pin	Function	I/O
14	F2- rotational speed 90°, calibration signal trigger	Input/output
15	F2+ rotational speed 90°, calibration signal trigger ground	Input/output

1) The current information is for the maximum permitted continuous currents of the AP17. The number of connection boards per housing is not limited, but a maximum of three connection boards can be used for transducer supply (16 V, for example for torque flange T10 series, T12/T12HP, T40 series).
If multiple to torque flanges are being supplied, make certain they are started up one after the other and not simultaneously.

Termination resistors must be connected for long lines (>100m) and high frequencies (>200kHz). To do this the 3x DIP switch S2 on the motherboard of the AP17 must be switched to "ON".

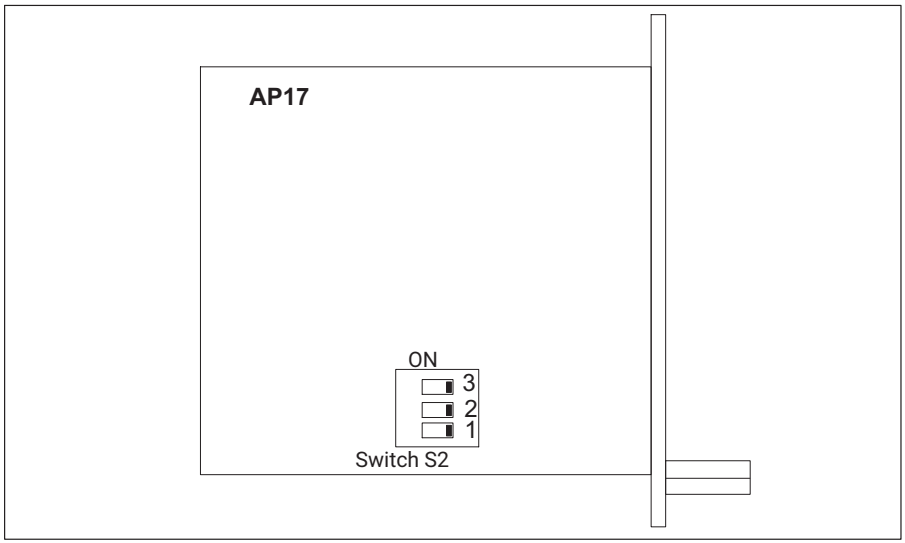

Fig. 4.7 AP17 component layout

Profibus

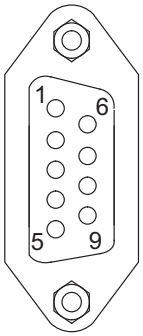

4.5.3.2 AP77

The pin assignment of the 9-pin Sub-D socket complies with Profibus standards IEC 61158/61784.

Pin	Function
1	-
2	-
3	RS485-B
4	RS485-RTS
5	GND
6	VCC
7	-
8	RS485-A
9	GND

Information

Further information can be found in the ML77B operating manual.

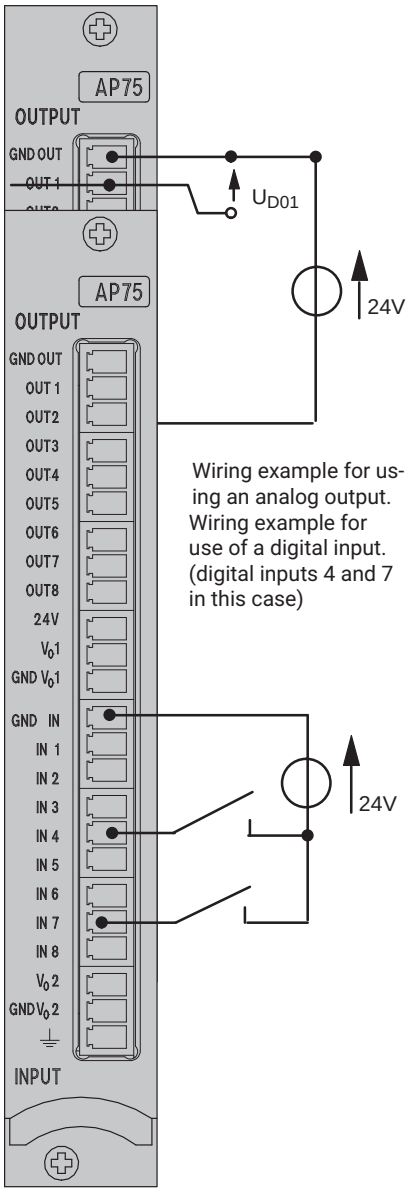

Wiring example for using an analog output.
Wiring example for use of a digital input. (digital inputs 4 and 7 in this case)

4.5.4 Inputs and outputs of AP75

The AP75 connection board has 8 digital inputs, 8 digital outputs and 2 analog outputs. The digital outputs must be operated with an external current feed (12 V...24 V). The AP75 connection board can be operated together with the special function module ML78B.

Please note that the measuring systems of the digital inputs and outputs are separated from each other.

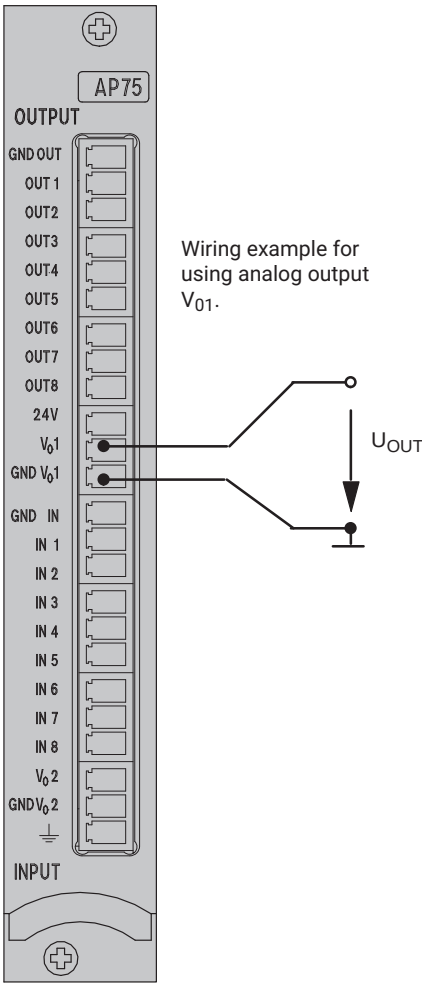

Wiring example for using analog output V_{01}.

Analog outputs V_{01} and V_{02} have a common ground system that is separated from the ground systems of the digital inputs and outputs.

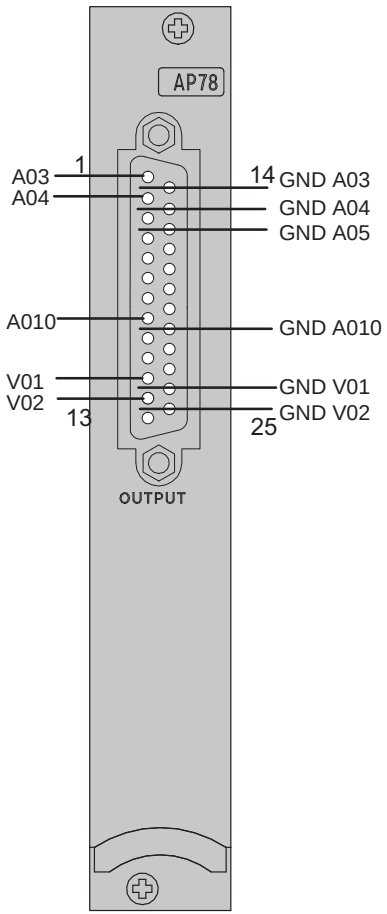

4.5.5 Analog outputs on the AP78

The AP78 connection board has 10 analog outputs. The analog outputs outputs designated A03...A10 are electrically isolated, while outputs VO1 and VO2 can be digitally filtered. The AP78 connection board can be used together with the ML78B.

5 STARTING UP

This section shows you the necessary operating steps to place your measurement chain (measuring amplifier system and transducer) in operation.

This will enable you to perform a functional test of all the components. The steps are deliberately described in very general terms so that there is no need to go into the details of specific transducers or amplifier modules. However the description can easily be applied to your measurement chain. In some cases – especially when connecting transducers – reference is made to the following sections. We also point out some typical errors that may occur during start-up.

After the initial start-up is performed and the amplifier module is adapted to your transducer, you will be ready to become familiar with the remaining functions and possibilities of the MGC*plus* measuring amplifier system.

- Unpack the MGC*plus*.
- Check the MGC*plus* for damage.
- Is the delivery complete?
- Compare the contents of the package with the enclosed documentation list. Is the documentation complete?

5.1 Devices in the desktop housing and rack frame

If you have not already received your measuring amplifier system complete, note the following information as you put together your system:

- Plug in the measurement cards from the front and the corresponding connection boards from the back.
  The assignment is important in this process.
- If you are using the wide connection board or amplifiers (8 sub-units), plug them into slots 1, 3, 5, etc. Slots 2, 4, 6, etc. on the front and back must be left free or fitted with blind panels.

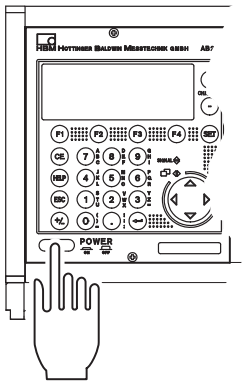

Switching on

- For safety reasons all free slots (amplifiers or connection boards) must be covered by blind panels.
- Check to make certain the amplifiers and connection boards are securely plugged in.
- Connect the device to the mains with the mains cable provided.
- Connect your transducer to the applicable socket on the back of the connection board (designation BU01). If you are using a cable pre-assembled in-house, please note the pin assignments for your transducer in section B.

Comply with the safety instructions on ➔ *page 9*.

- Turn the device on using the POWER button on the front of the device.

The AB22A is initialized (all the LEDs light up briefly) and detects the components present.

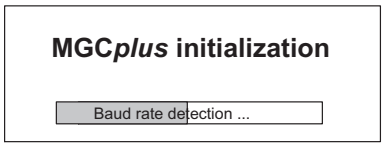

If a transducer is not connected, an overload is displayed!

After the opening display, the measured value of image type "1 measured value" appears in the standard configuration (factory settings). Pressing the Switch key (SET) takes you to Setup mode, where you can configure the system, display, amplifier and additional functions.

We recommend first setting the Language if you want to use a language other than German.

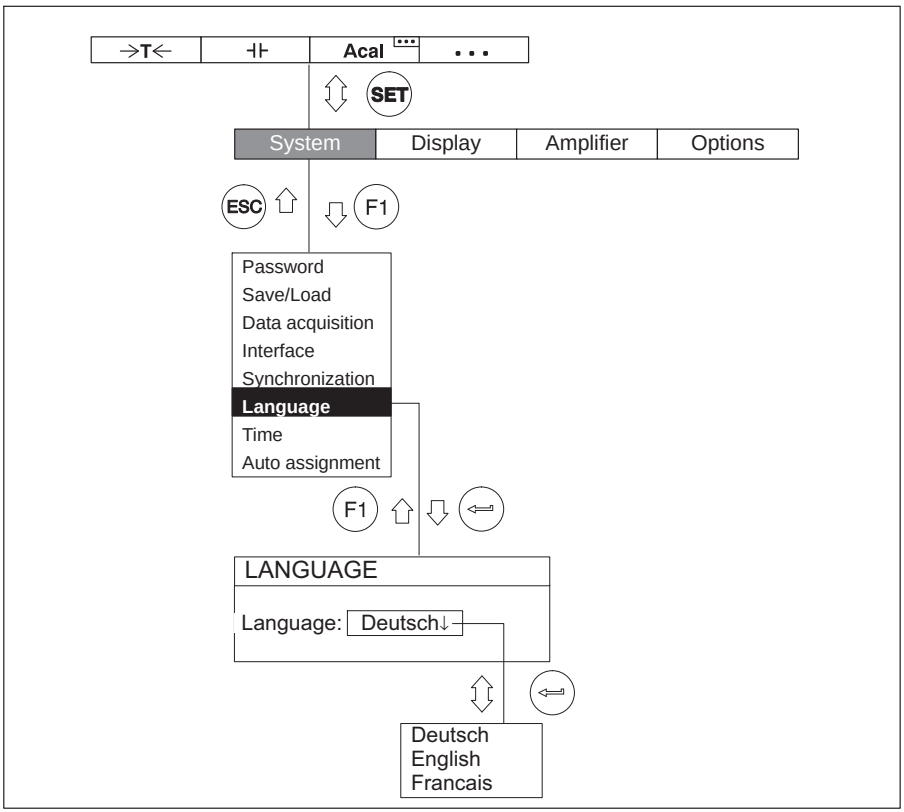

6 FUNCTIONS AND SYMBOLS OF THE AB22A

6.1 Control elements of the AB22A

You can make all the settings on your device with the keys on the AB22A/AB32 display and control unit. You can use the Switch key (SET) to select the operating states "Measurement" or "Setting".

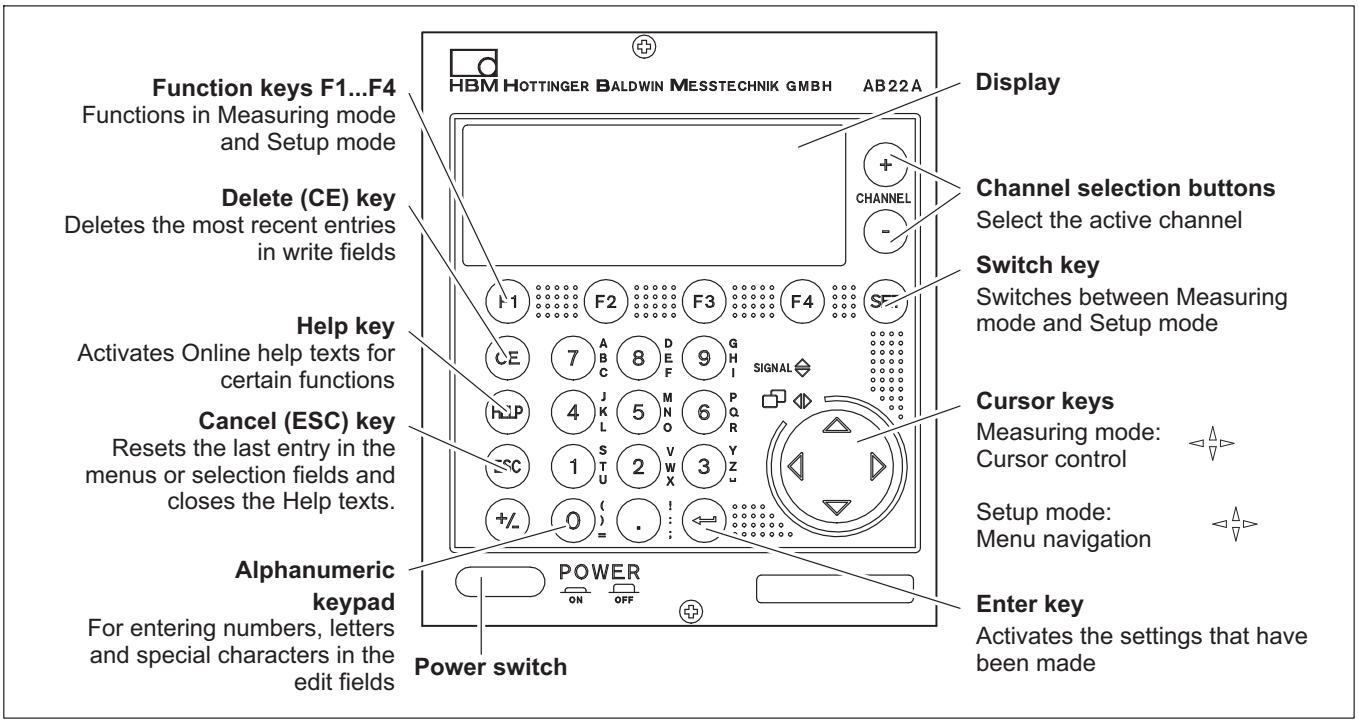

6.2 Display

6.2.1 The first display

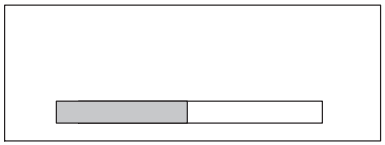

After the mains voltage is turned on, the initialization of the device is indicated in the display by a horizontal progress bar. You are also informed of the current software version.

After the opening display, the measured value of image type "1 measured value" appears in the standard configuration (factory settings). Pressing the Switch key (SET) takes you to Setup mode, where you can configure the system, display, amplifier and additional functions. We recommend first setting the Language if you want to use a language other than German.

6.2.2 Display in measuring mode

Display with image type "1 measured value"

Settings for different image types are described in detail in ➔ *section 9 "Display", page 207*. The image types set by default in the factory are presented here as an overview.

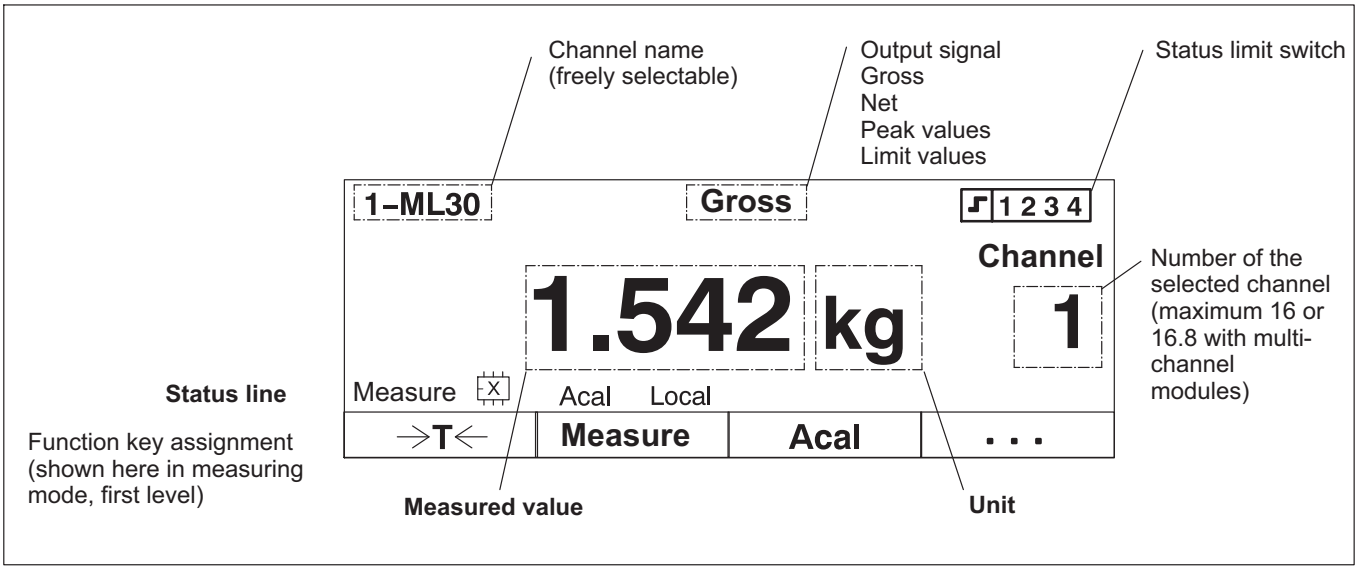

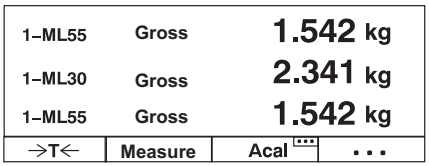

Display with image type "3 measured values"

To the next image type with ◄ ►

Display with image type "6 measured values"

To the next image type with ◄ ►

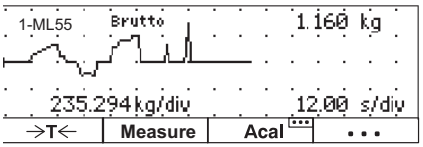

Display with image type "YT realization"

To the next image type with ◄ ►

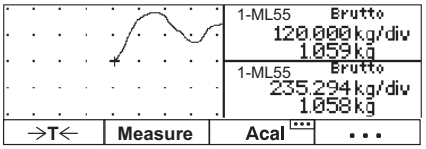

Display with image type "XY realization"

To the next image type with ◄ ►

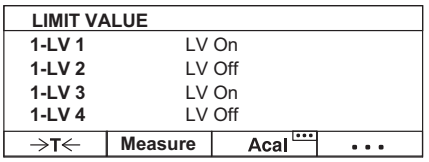

Display with image type "Status limit switch"

To the next image type with ◄ ►

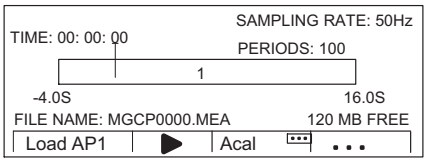

Test series 1

Display with image type "Data acquisition"

To the next image type with ◄ ►

Symbols in the display

The status line provides you with information about the current status of the measuring device:

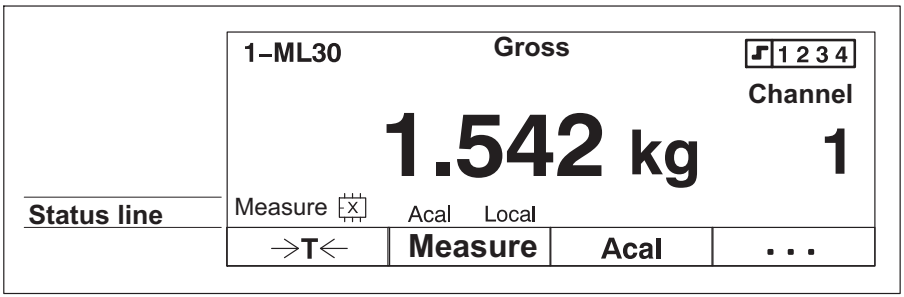

Measure, Zero, Calibrate

Status of the amplifier input

Status display of the parameter set memory

Number 1...8	Number of the current parameter set
E	XM001 memory module
S	Factory settings
X	User-defined setting; appears when a parameter set has been changed
↑/↓	Load next/previous parameter set

Acal

Automatic calibration turned on ("Acal" function)

⇔

Computer interface is active

Data transfer via link

1 2 3 4

Status of limit switches. If the set activation level of a limit switch is exceeded, the switch number has a black background in the display.

1 2 3 4

Example: Activation level of limit switch 1 is exceeded

Local

Remote control turned off

Remote

Remote control turned on

Channel 1	Channel number of a single-channel module
Channel 3.2	Channel number of a multi-channel module First number is the slot number Second number is the number of the subchannel

6.2.3 Messages of AB22A/AB32

Message in the display	Cause	Remedy
The CP42/CP52 hard disk is full!	The capacity of the storage medium is exceeded.	Insert a new storage medium or delete data.
Error during configuration of channels x, y, z!	a) Amplifier types x, y, z do not match the types of the configuration file (modules mixed up). b) There is no amplifier module present.	Check the fitting of the MGC*plus* device.
The following channels have been configured: x, y, z	Information about successful configuration of channels x, y, z	-
This is the wrong hard disk!	There is a file in the storage medium (IdentTEDS.txt) containing the serial no. of a CP42/CP52. This serial no. does not match the serial no. of the CP42/CP52 that is present.	Check the assignment of the storage medium CP42/CP52 and if necessary delete the IdentTEDS.txt file (see also the operating manual for the "MGC*plus* Assistant; Serial number of CP42/CP52").
Overload (In Status mode the red "ERROR/WARN." LED on the front panel of the amplifier module is lit).	The set measuring range is exceeded (gross, net or both).	a) Check the values in zero or tare memory. b) Perform a zero balance or taring. c) Zoom in on the measuring range.
Calibration errors (In Status mode the red "ERROR/WARN." LED of the front panel of the amplifier module is lit).	a) No feedback lines connected and Autocal was triggered. b) Connection board has been changed. c) RAM/EEPROM errors d) Calibration line is not correct	a) Check the transducer connection and trigger an autocalibration. b) Perform a setup. c) Perform a setup. d) Check the transducer settings (transducer type, excitation voltage, output characteristics).

6.3 AB22A in Setup mode

The settings of the MGC*plus* device are combined together in function-related groups. After you press the Switch key (SET) you are in the setting dialog and the selection bar appears in the display.

Display in Setup mode

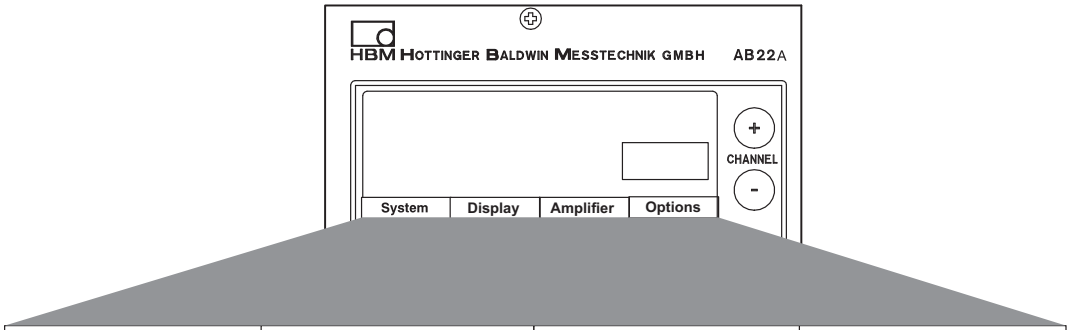

System	Display	Amplifier	Options
System-related settings that are usually only made for initial operation or a new measurement task.	User-oriented settings of the display such as the preferred realization of measured values, assignment of function keys or assigned channel names.	Amplifier settings for each channel, for example to adapt to the amplifier module or signal conditioning.	Additional settings for each individual amplifier.

Selection bar

Press the Switch key (SET) to go to the Setting dialog. In the bottom section of the display there is a selection bar with terms assigned to the function keys below them (F1...F4) (selection level 1).

You can adjust your device in various menus that can be called with the selection bar in the display. Depending on the function you can call up to 4 menu levels (selection and setting levels). In the first two levels you can select terms. You are in the *selection levels*. In the next levels you will adjust certain values or turn functions on/off. Then you will be in the *setting levels*.

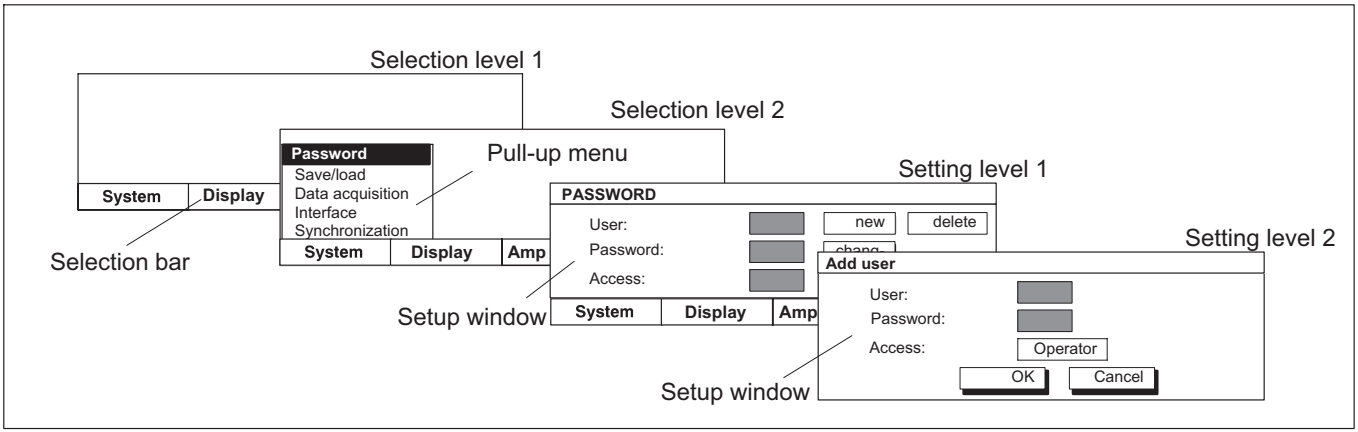

Fig. 6.1 Example: System setting password

6.3.1 Call menus

Press the Switch key (SET). At first only the selection bar appears. Now if you press the function keys F1...F4, the associated pull-up menu appears above the corresponding term (in this example **System**). Move the light bar to the desired term in the pull-up menu with the cursor keys (in this case **Language**) and press the confirmation key (↵). Now you are in the setting level for the selected term. The current setup window may lead to additional setting levels.

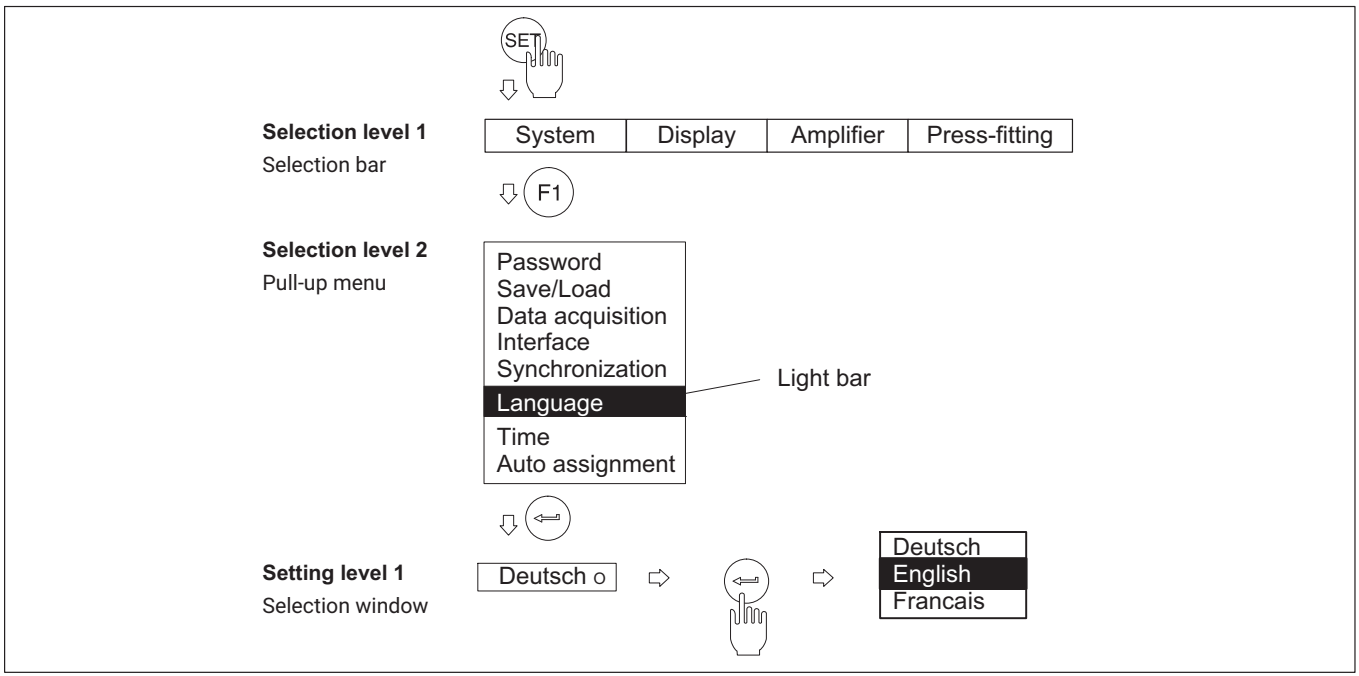

6.3.2 Exit menus

If you want to leave a menu level press

- the Switch key (SET)
  Result: Return to measuring mode:
- or one of the function keys F1...F4
  Result: Return to selection level 2
- or (if present) the Cancel or OK
  button symbol. Result: Return to the previous menu level

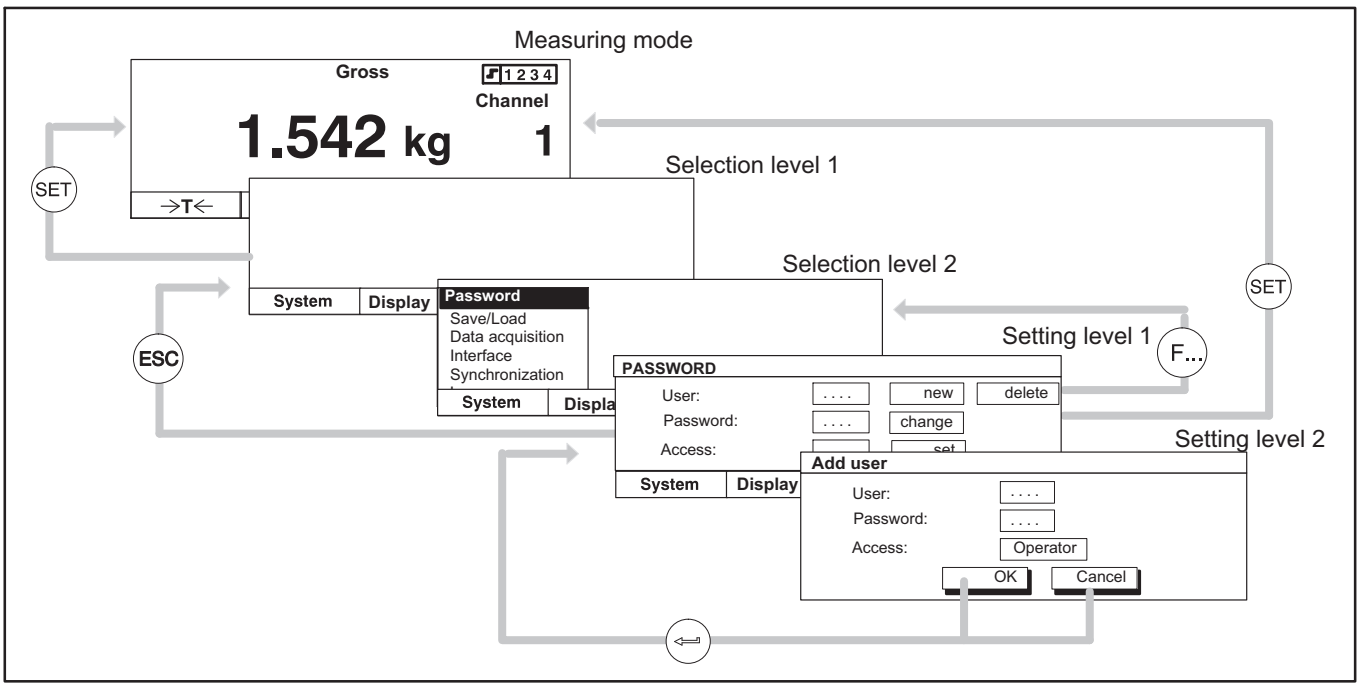

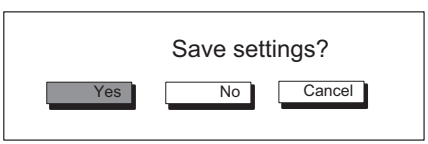

Before you exit a menu window and return to measuring mode, you always have the option of saving the settings you have made, deactivating them or aborting the dialog window. The confirmation prompt shown on the side appears for this purpose.

In the factory settings **Yes** is selected. Confirm with (↵).

6.3.3 Channel selection in measuring mode

There are two ways to select a channel in measuring mode:

1. With the channel keys (+ CHANNEL -).
2. With direct input of the channel number using the alphanumeric keypad (recommended with multi-channel modules).

Two examples of method 2:

Example 1: Selecting the channel of a single-channel module

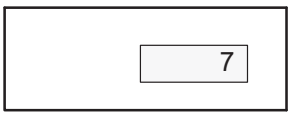

- Press the numeric key of the desired channel (for example 7)
- The channel input field appears in the display with the desired channel number.
- Confirm with (⇦).

Example 2: Selecting a multi-channel module

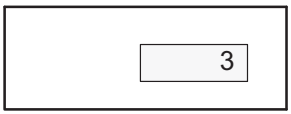

- Press the numeric key of the desired slot (for example 3)
- The channel input field appears in the display with the desired slot number.

(If you confirm now with (⇦), the first subchannel, in this case 3.1, is selected).

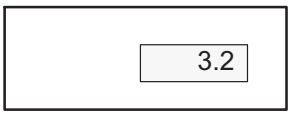

- Enter a dot and the desired subchannel number after it.
- Confirm with (⇦).

Channel input field

CHANNEL NAME	Channel
Channel name:	2-ML55

6.3.4 Channel selection in Setup mode

In most setup windows of the AB22A the name of the currently selected setting menu and the selected channel appear in the header.

There are two ways to select a channel in setup mode:

1. With the channel selection keys (+ CHANNEL −) (select the channels one after the other).
2. By entering the channel number in the channel number input field. There is an option that allows you to jump directly from one channel to any other.

- Press the cursor key (↑) to go to the channel input field of the header.
- Enter the desired channel number (for example with a multi-channel module ***3.2***).
- Confirm with (↵).

6.3.5 Saving settings

All the settings you make before the confirmation prompt are temporarily saved in working memory (RAM) as soon as you have made a change and confirmed with (↵). The data is permanently saved as soon as you exit Setup mode and confirm the confirmation prompt with **Yes**.

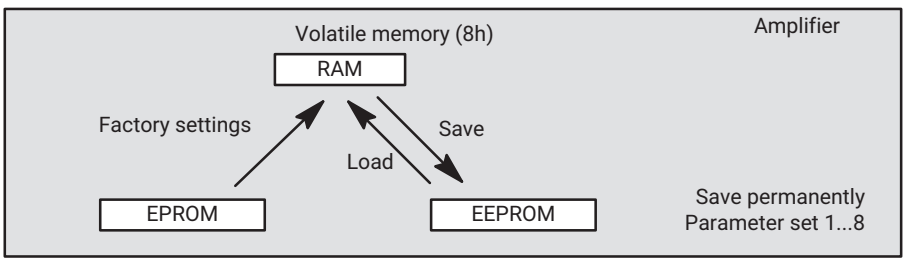

6.3.6 Drop-down menus

In the first two selection levels you can select terms. On the first level (menu bar) by pressing the corresponding function key, on the second level by making a selection in pop-up menus.

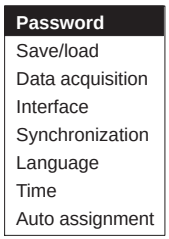

- Select and confirm in the selection fields (pull-up menu)
- The selected field appears in reverse video. Confirm the selection with

6.3.7 Setting elements in the setup windows

Enter the parameters on the setting level with the setup window. The setup windows contain *Dialog boxes* that include four different types.

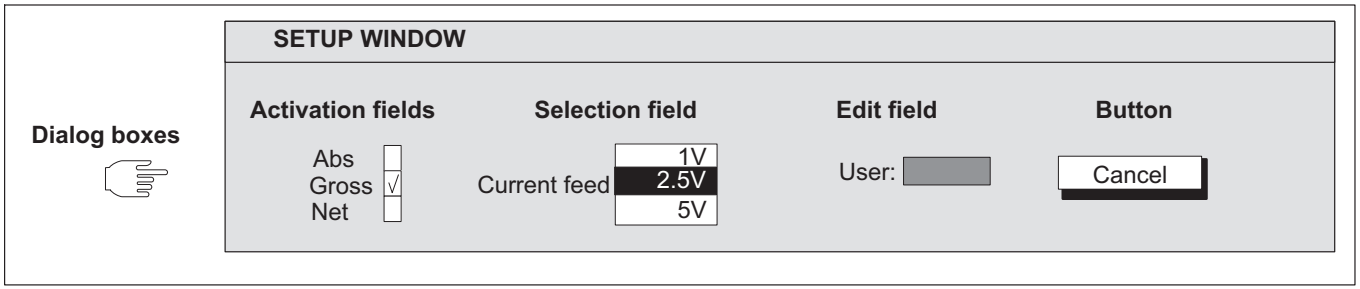

Fig. 6.2 Four different kinds of dialog boxes in setup windows

- Switch on or off in *activation fields*

The selected field appears in reverse video. Confirm the selection with .

A tick appears in selected boxes ("activated"). Pressing the activation button again cancels activation.

Channel-related activation fields

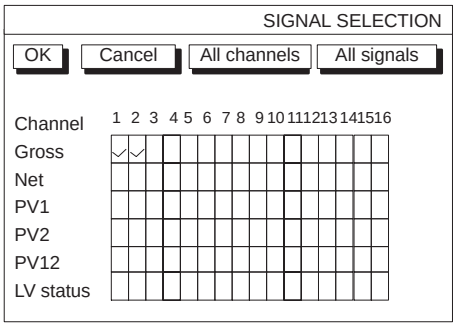

Fig. 6.3 Example of a channel-related activation field

Multi-channel modules are identified by two dots under the channel number (channel number 8 in the example). If you select the activation field of a multi-channel module and activate it with ⏎, a new setup window appears with activation fields for the individual subchannels.

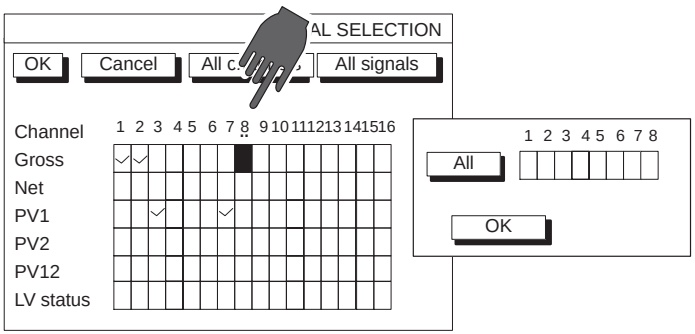

Fig. 6.4 Example of an activation field of a multi-channel module

Current feed: 5V ↓

Current feed: 1V / 2.5V / 5V

- Expand and make a selection in the *selection fields*

The selected field appears in reverse video. After you press the confirmation key ⏎ the selection field opens up. Select ↕ with the cursor keys and confirm your setting with ⏎. In the documentation (not in the display) fields of this kind are identified by an arrow pointing down ↓.

Information

The "Unit" selection field in the "Transducer" setup window can be edited by double clicking with ⇦. Then you can enter up to four characters (for example min^{-1}, with $^{-1}$ as a character that is placed on the 3 key).

User:
Zero point: 0.000

Edit fields

You can enter numbers or letters in the edit fields. In some edit fields you can only enter numbers (for example a zero value) because it would not make any sense to enter letters.

The selected field appears in reverse video. Confirm your entries with ⇦.

In the example on the left you can see one edit field with no content and another edit field with content.

An edit field together with content can be

- directly overwritten,
- partially edited
- or completely deleted with the delete key CE.

Entering numbers and letters

The keys of the alphanumeric input field are assigned seven times each: 1 number, 3 upper-case letters and 3 lower-case letters. A number appears the first time you press the key, with letters appearing after it is pressed again.

To enter consecutive letters that are both on the same key, press the cursor key between the letters ▶.

Example of the letter sequence "FE":

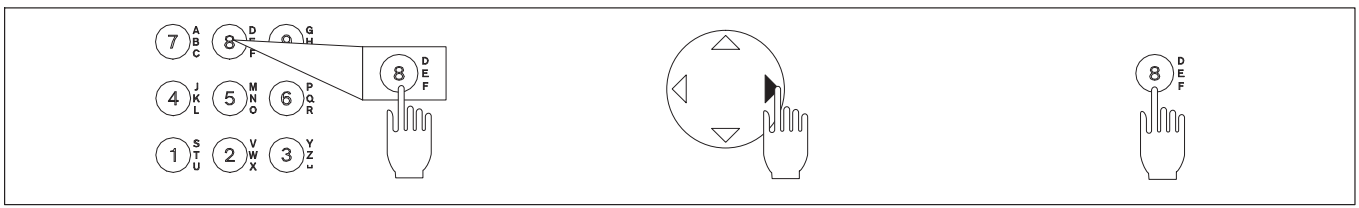

The minus sign of the (+/_) key can also be used as a separator in text fields.

The (0) key also has special characters °, Ω, µ assigned to it.

The (.) key also has the superscript numbers ^{2,} ^{3,} and special character @ assigned to it.

The (3) key also has the superscript number $^{-1}$ assigned to it.

Buttons

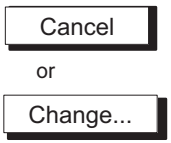

The selected field appears in reverse video. Confirm with (↵). If the button label is followed by three dots, (change...), an additional setup window appears after confirmation.

7 MEASURING

7.1 General information

This section describes the steps you will need to follow to perform a measurement with MGC*plus*. At the beginning of each section an example explains the transducer-specific details for adapting the amplifier modules. After you have adapted the amplifier modules you can start with the measurements. Other functions such as limit switches and peak-value memory are described in ➔ *section 8 "Additional functions", page 185* .

Steps to adjust the measurement chain

1. Transducer-specific settings Bridge type, bridge excitation voltage, sensitivity, gage factor.
2. Settings for signal conditioning Zero balance, zero drift, tare value, filter settings.
3. Display-specific settings; unit, decimal places, display range, step.
4. Settings of the analog output: Gross, Net, Peak value, Output characteristics.

There are two ways to adjust the zero point and measurement range:

- By entering the given transducer characteristics
- By calibration with direct loading

7.2 General principles for adjusting a measurement channel

The "Amplifier" pull-up menu is adapted to the signal flow of a measurement chain. It is the basis for making adjustment to the entire measurement chain.

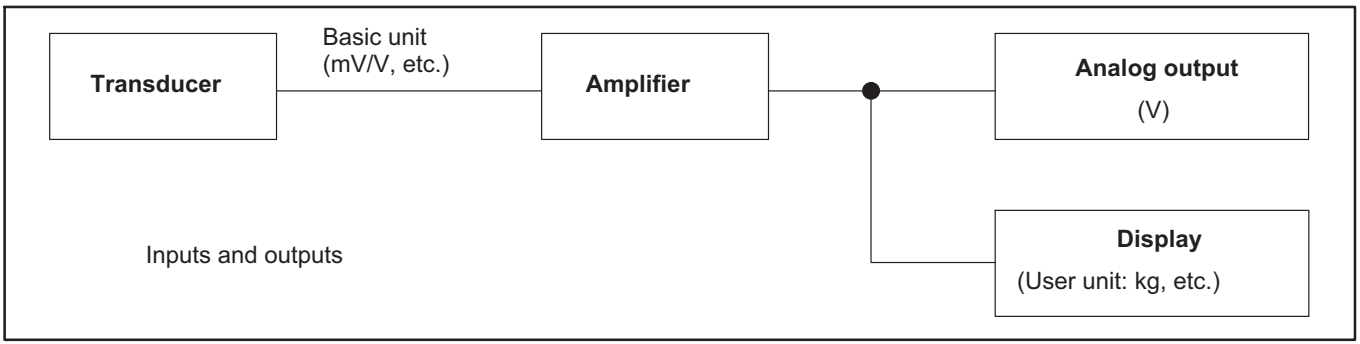

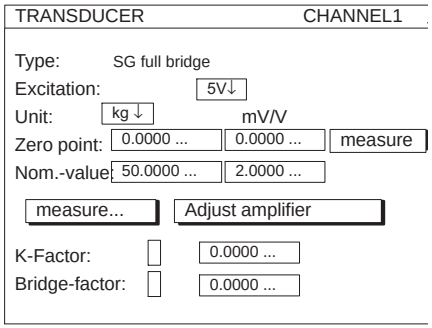

The following steps are normally needed to adjust a measurement channel:

- ▶ Press the Switch key (SET) to select Setup mode.
- ▶ If necessary: Set the desired language for the menu in the system settings (➔ *see section 10.5 "Language", page 275*).
- ▶ Make transducer-specific settings
  - Type and bridge excitation voltage
  - Unit
  - Characteristic curve (zero point and nominal (rated) value)
- ▶ Adjust amplifier

Once these steps are complete the most urgent settings and adaptations have been made and simple measurements are possible. The following steps are optional

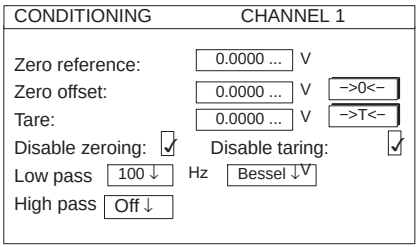

- ▶ Make settings for signal conditioning
- Zero balance (zero drift)
- Taring
- Filters

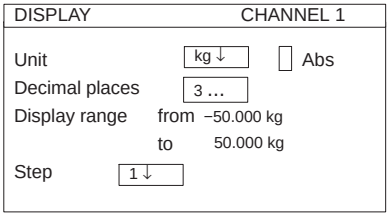

- ▶ Adjusting the display format
- Unit
- Decimal places
- Display range
- Step

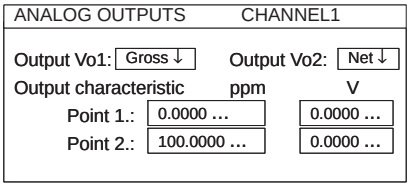

- ▶ Adjusting analog outputs
- Gross/Net/Peak value
- Output characteristics
- ▶ Adjusting additional functions (if necessary)
- Limit values, peak values
- Remote control contacts, …

7.2.1 Adapting to the transducer

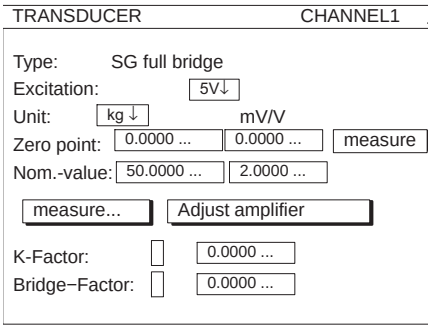

ML38B only:

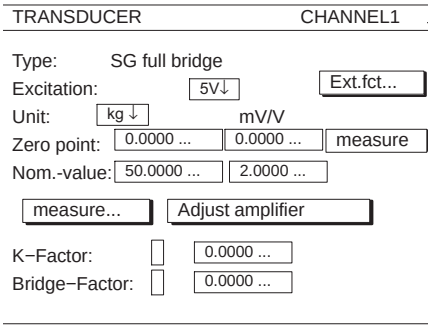

Type

Selection field for transducers that can be connected. The selection depends on the amplifier type and connection board.

Excitation

Selection field for possible current feeds (not present for all amplifier types!). The selection depends on the amplifier type and connection board. Further details can be found in the next sections.

Ext.fct... (for ML38B only)

Extended functions for amplifier module ML38B (➔ *see section 7.2.1.1 "Extended functions of the ML38B", page 119*).

Unit

Selection field for the physical unit. The basic unit mV/V cannot be changed.

Zero point

Edit fields for entering zero point. The left field refers to the physical unit, the right field to the basic unit. Activate the measure button to measure the current zero signal. The value then appears in the right edit field in mV/V.

Nominal (rated) value

Edit field for the nominal (rated) value. The left field refers to the physical unit, the right field to the basic unit (this nominal (rated) value can be found on the transducer type plate).

measure...

Button for opening the "Characteristic curve points" setup window where you can calibrate characteristic curve points 1 and 2.

Adjust amplifier

Button for adapting the amplifier to the entries for the zero point and nominal (rated) value.

7.2.1.1 Extended functions of the ML38B

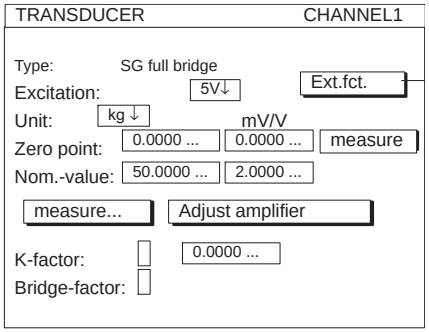

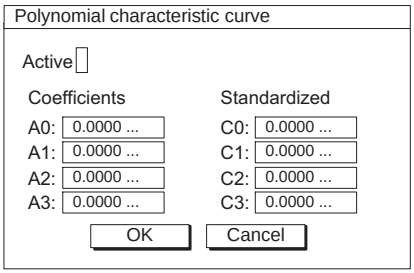

Nominal (rated) value

First enter the nominal (rated) value. See the table for the linear interpolation equation (in the calibration certificate) for the value. If it is not available, enter the value for the maximum calibration level with the corresponding arithmetic mean in the electrical unit.

Information

These values for the nominal (rated) value must not be changed any more once the coefficients have been entered for the polynomial characteristic curve!

Ext.fct...

Active

Press the confirmation key to activate the characteristic curve (a check mark appears in the activation field). When the polynomial characteristic curve is activated, the following fields can no longer be selected in the Transducer menu: Zero point, Nominal (rated) value, Measure, calibrate and Adjust amplifier.

Coefficients/standardized

You can use the cubic polynomial characteristic curve to correct the transducer signal (in mV/V). This adjusts the measured values to the true characteristic curve. To do this enter the coefficients A0, A1, A2 and A3 of the third order polynomial, which is described by the following equation:

$Y_{Ph} = A3 \cdot Y_{el}^3 + A2 \cdot Y_{el}^2 + A1 \cdot Y_{el} + A0$

Y_{Ph}: Display in physical unit with polynomial characteristic curve

Y_{el}: Measured value in electrical unit

The values of the coefficients can be found on the transducer calibration certificate.

The amplifier itself requires coefficients (C0 ...C3) standardized to the value 1. The coefficients from the calibration certificate (A0 ...A3) are automatically converted before they are forwarded to the amplifier (also in MGC*plus*-Assistant).

Conversion: $C = A \cdot \frac{\text{Nominal (rated) electrical unit (right input field)}}{\text{Nominal (rated) physical unit (left input field)}}$

Example: Enter the coefficients from an HBM DAkkS calibration certificate for *Force*.

Note the following correspondences:

DAkkS calibration certificate	Polynomial equation
T	A1
S	A2
R	A3

Notice

During calibration the measured values must be acquired in the electrical unit (mV/V) without adaptation in the display!

7.2.2 TEDS transducers

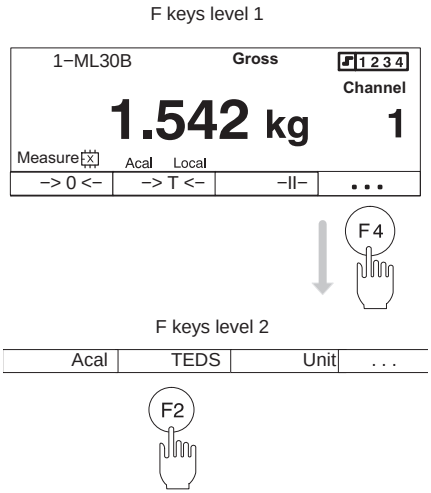

TEDS (Transducer Electronic Data Sheet) is the designation for an electronic data sheet in the transducer. It is stored in an electronic module that is inseparably connected to the transducer. It can be located in the transducer housing, in the inseparable cable or connector plug.

Many components in the MGC*plus* amplifier system are capable of reading the transducer information stored in the data sheet and converting it into amplifier settings so that measurements can be started immediately.

MGC*plus* supports TEDS transducers that comply with the data protocol (OneWireProtocol) and data structure in the IEEE 1451.4 standard.

This means that the same cables can be used as for transducers that do not have TEDS.

Some connection boards of the MGC*plus* system such as the AP01i also offer the possibility of entering TEDS data signals to two separate pins (ground and TEDS data signal).

Loading TEDS data into the amplifier

In the default setting, the TEDS key F2 is in level 2 of the function keys.

- Press it in Measuring mode (F4) .
- Press the TEDS key (F2) .

The actual amplifier will then be parameterized with the transducer settings from the TEDS chip if it supports this functionality.

For an overview of which connection board/amplifier combinations are TEDS-capable, ➔ *see section 3.6*. The amplifiers must be equipped with the current firmware, which is available from www.hbm.com/downloads.

7.2.3 Signal conditioning

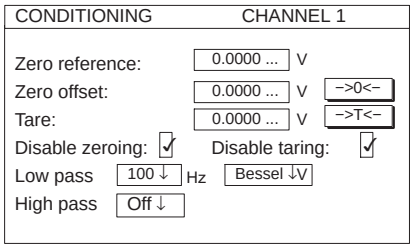

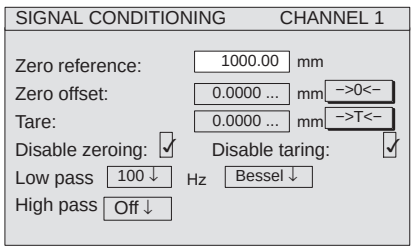

Zero reference

The amount by which the relative zero point is offset relative to absolute zero.

Example: A displacement transducer (nominal (rated) displacement ±20mm) will be mounted at a height of 1m, measured from the machine foundation. Absolute movement will be shown in the display.

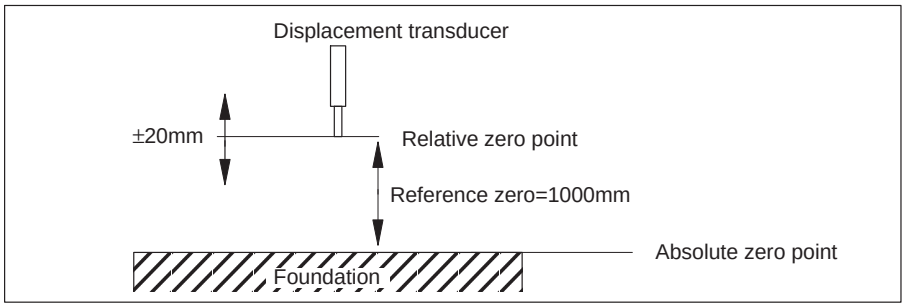

Zero offset

Activate the ->0<- button to initiate a zero balance. If the value of the zero drift is known, you can also enter it directly in the edit field. The zero balance affects the gross display.

Tare

Activate the ->T<- button to initiate a taring. If the tare value is known, you can also enter it directly in the edit field. Taring affects the net display.

Disable zeroing/disable taring

You can disable the zero balance and/or taring. The disabling applies to all triggering mechanisms (F-keys, control inputs, software).

A brief example will clarify the difference between a zero balance and taring:

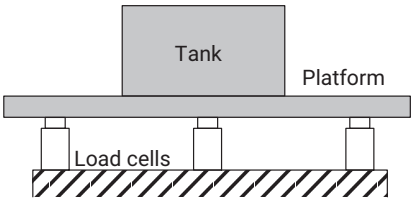

A platform is standing on three load cells and will be used for tank weighing. Two different components are poured into the tank and their individual weight (net) will be displayed.

The table summarizes the states before and after zero balance or taring is triggered.

	Action	Setup window		Display	
		Zero offset	Tare	Gross	Net
Platform 55 kg	–>0<–	55 kg	0	before 55 kg	before 55 kg
				after 0 kg	after 0 kg
Container 6 kg	–>0<–	61 kg	0	before 6 kg	before 6 kg
				after 0 kg	after 0 kg
Component 1 7 kg	–>T<–	61 kg	7 kg	before 7 kg	before 7 kg
				after 7 kg	after 0 kg
Component 2 8 kg	-	61 kg	15 kg	15 kg (total content of the container)	8 kg (component 2 only)

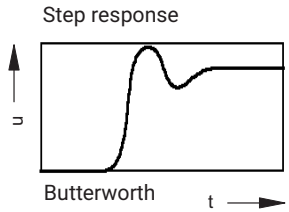

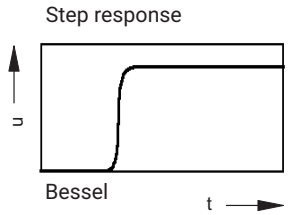

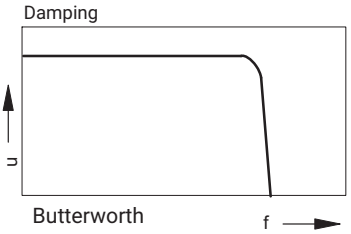

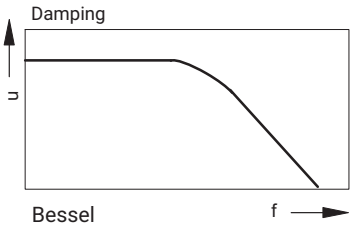

Low pass

Low-pass filters are used to suppress unwanted higher frequency interference that lies above a specific cut-off frequency.

Amplitude response, runtime and step response are dependent on the filter characteristic. You can select between the Butterworth characteristic and the Bessel characteristic.

The Butterworth characteristic shows a linear amplitude response with a steep drop above the cut-off frequency. There is an overshoot of approx. 10%.

The Bessel characteristic shows a step response with very small (<1%) or no overshooting. The amplitude response drops less steeply.

High pass

High-pass filters are used to suppress unwanted lower frequency interference that lies below a specific cut-off frequency. With the high-pass filter you can suppress slow fluctuations, such as those resulting from temperature influences and time drift.

The high-pass filter has no function when resistance thermometers and thermocouples are connected.

Important

To ensure that the high pass will function, the low-pass setting must not fall below the following limits:
Bessel: ≥5Hz
Butterworth: ≥10Hz

The nominal (rated) values of the filters provided by the AB22A display and control unit and by the MGC*plus* Assistant and catman software are oriented towards the -1 dB values (see technical data).

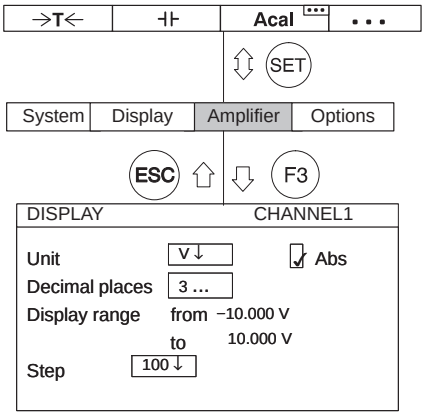

7.2.4 Display

Unit

Select the unit in the display. You can choose between the basic unit (mV/V), the user unit (kg, etc.) and the unit of the analog output (V). Then the corresponding measured value appears in the display.

You can achieve the same effect with the "Unit" function (factory settings: F3/level 2; ➔ *see also section 9.2 "F keys", page 226*).

Abs

If the absolute display is activated (☑), the signal appears in the display at the amplifier input without signal conditioning (for example zero drift or taring).

Decimal places

Number of places after the decimal.

Display range

Display range in the selected unit (displayed automatically).

Step

The step defines the size of the display jumps. It refers to the last decimal place of the nominal (rated) value.

Example: Nominal (rated) value 20kg

Decimal places 1 (20.0kg)
Step 1 means display jumps every 100g
Step 5 means display jumps every 500g

Decimal places 3 (20.000kg)
Step 1 means display jumps every 1g
Step 5 means display jumps every 5g

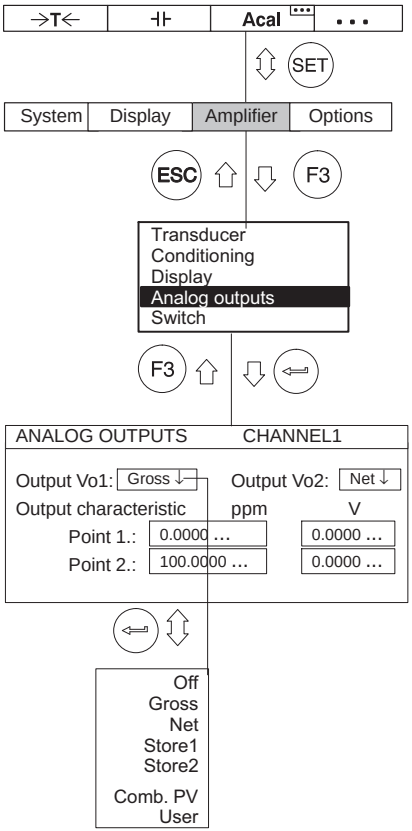

7.2.5 Analog outputs (single-channel modules only)

Output V_O1

Signal selection for analog output 1 (socket Bu2 on the back side of the device and BNC socket on the front panel for test purposes).

Output V_O2

Signal selection for analog output 2 (socket Bu2 on the back side of the device).

Output characteristic

The edit fields for characteristic curve points 1 and 2 are updated automatically as soon as you activate the Adjust amplifier button in the "Transducer" setup window. However, you can also change the output characteristics with direct entry.

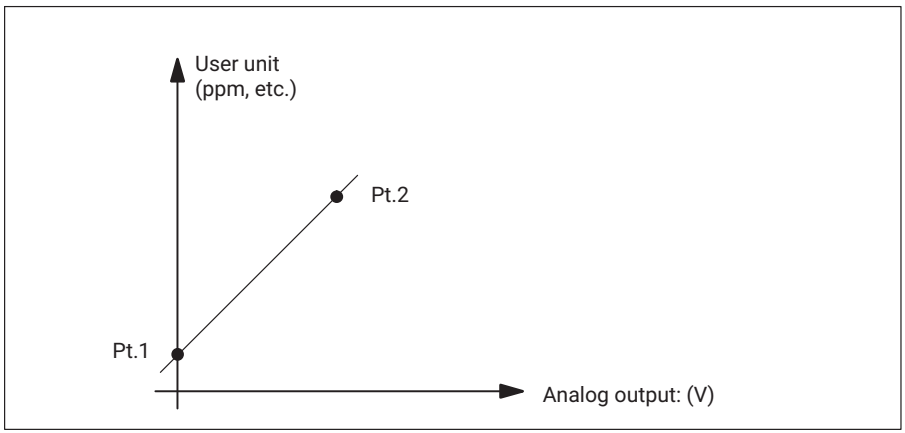

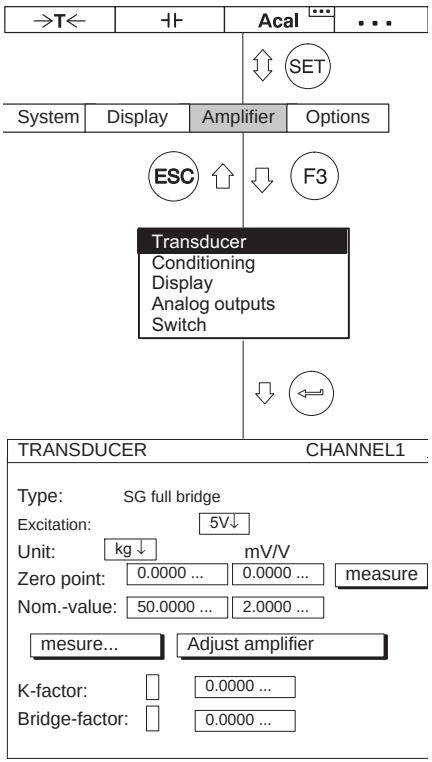

Example: Minimum setting for first measurement

The transducer is a load cell with the following nominal (rated) data:

Maximum capacity 50kg
Nominal (rated) sensitivity 2mV/V

1. Use the channel selection keys (+ CHANNEL -) or a direct entry (➔ *see page 108*) to select the desired channel.
2. Use the Switch key (SET) to switch to Setup mode.
3. Press the (F3) function key, use the cursor keys to select the **Transducer** and confirm with (⏎).
4. Use the cursor keys to select **SG full bridge** and confirm with (⏎).
5. Use to switch to the **Excitation** selection field, press (⏎) and select **5 V**.
6. Confirm with (⏎).
7. Use to switch to the "Unit" selection field. Press (⏎). Select **kg** as the unit and confirm with (⏎).
8. Use to switch to the **Zero point** edit field and enter the value ***0*** in the left edit field. Confirm with (⏎).
9. Unload the load cell.

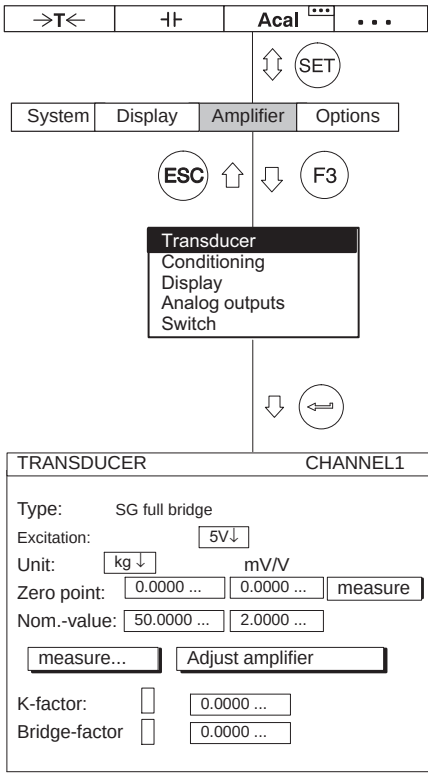

10. Use to switch to the measure... button and confirm with (the measured value appears in the right edit field of **Zero point**)
11. Use to switch to the **Nominal (rated) value** edit field and enter the value ***50***. Confirm with .
12. Use to switch to the right edit field (**mV/V**) and enter the value ***2***. Confirm with .
13. Use to select the Adjust amplifier button and confirm with .
14. Use the Switch key SET to go to measuring mode and confirm the confirmation prompt with .

7.3 Adapting to the transducer

7.3.1 SG transducers

SG transducers (load cells and force transducer from HBM) are passive transducers that have the following features:

- They must be supplied with an excitation voltage (carrier frequency or direct voltage)
- They are SG full bridge circuits
- The transducer is identified by the following data:
  - Maximum capacity (for example 20 kg)
  - Nominal (rated) sensitivity (for example 2 mV/V)

These data items must be taken into consideration when adapting the amplifier.

The standard setting for the excitation voltage U_B with SG full bridge circuits is 5 V. If higher measuring ranges are required or multiple transducers are connected in parallel, a lower excitation voltage must be selected. The individual values depend on which module is used.

Amplifier	Measuring range limits (mV/V)			
	U_B=10V	U_B=5V	U_B=2.5V	U_B=1V
ML10B	±0.1...3.06	±0.2...6.12	±0.4...12.24	±1.0...30.6
ML30B	-	±0.1...3.06	±0.2...6.12	±0.5...15.3
ML38B	-	±0.2...5.1	±0.4...10.2	-
ML55B	-	±0.1...3.06	±0.2...6.12	±0.5...15.3

With these measuring range limits, depending on the setting, a voltage of 1 V ... 10 V can be generated on the analog output.

Important

The specified full scale values are maximum values that cannot be affected by settings of the analog output!

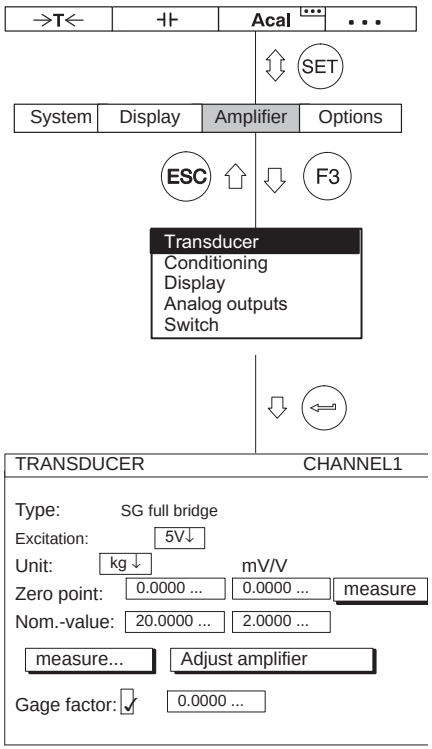

7.3.1.1 Direct entry of transducer characteristics

The settings are explained with the following example:

Load cells with characteristics: Maximum capacity 20 kg, excitation voltage 5 V, nominal (rated) sensitivity 2 mV/V

Measurements will be made up to 10kg, i.e. the display range for the amplifier is ±10.00 kg (display with 2 decimal places). 10 V will be generated on the analog output with a load of 10 kg.

1. Use the channel selection keys (+ CHANNEL -) or a direct entry to choose the desired channel (for example ***3.2*** (⇦))..
2. Use the Switch key (SET) to switch to Setup mode.
3. Press the (F3) function key.
4. In the pull-up menu select **Transducer** and confirm with (⇦).
5. Use (◆) to select **SG full bridge** and confirm with (⇦).
6. Use (◆) to switch to the **Current feed** selection field, press (⇦) and select 5V.
7. Confirm with (⇦).
8. Use (◆) to switch to the **Unit** selection field and press (⇦). Select **kg** as the unit and confirm with (⇦).
9. Use (◆) to switch to the **Zero point** edit field and enter the value ***0*** in the left edit field. Confirm with (⇦).
10. Unload the load cell.

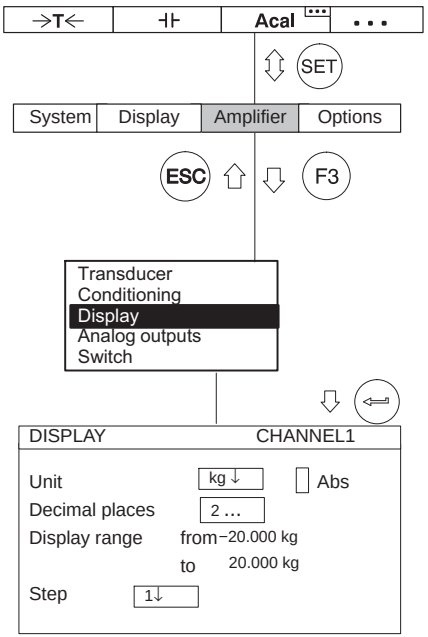

11. Use ⊕ to switch to the [measure] button and confirm with ↵ (the measured value appears in the right edit field of **Zero point**)
12. In the left edit field **Nominal (rated) value** enter the value ***20***.
13. In the right edit field **Nominal (rated) value** enter the value ***2*** (under the unit **mV/V**).
14. Use ⊕ to select the [Adjust amplifier] button and confirm with ↵. If you do not want to make any more changes to the display or output characteristics, you can now continue with step 24.
15. Go back to the pull-up menu with F3.
16. In the pull-up menu select **Display** and confirm with ↵.
17. In the **Decimal places** edit field enter the desired number of decimal places and confirm with ↵.
18. In the **Step** selection field enter the value ***2*** and confirm with ↵.

Information

The step refers to the last decimal place of the display value.

Example:
Entry 10.0 kg
→ Step 1 means display jumps every 100g
→ Step 5 means display jumps every 500g

Entry 10.000 kg
→ Step 1 means display jumps every 1g
→ Step 5 means display jumps every 5g

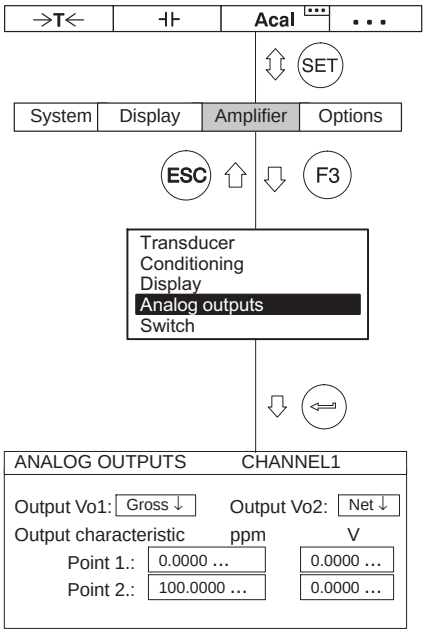

19. Go back to the pull-up menu with (F3).
20. In the pull-up menu select Analog outputs and confirm with (↵).
21. In the **Output Vo1** selection field select the desired signal and confirm with (↵).
22. In the **Output Vo2** selection field select the desired signal and confirm with (↵).
23. Use (✥) to select the **Output characteristic** edit fields and enter the desired values (left for the display, right for the analog output). Confirm with (↵).
24. Use the Switch key (SET) to go to measuring mode and confirm the confirmation prompt with (↵).

7.3.1.2 Calibrating the characteristic curve of the transducer

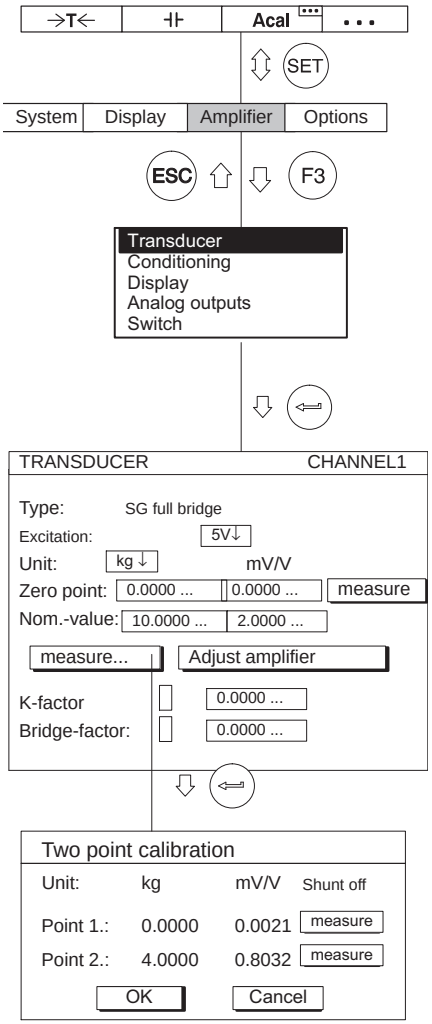

Transferring the signals supplied by the transducer at a defined loading

Example: A calibration weight of 4 kg is used to calibrate a 10 kg load cell.

Information

If the zero point and nominal (rated) value are not changed (for example in a recalibration), you can skip steps 1-10.

1. Use the channel selection keys (+ CHANNEL -) or a direct entry to choose the desired channel (for example ***3.2*** (↵))..
2. Use the Switch key (SET) to switch to Setup mode.
3. Press (F3).
4. In the pull-up menu select **Transducer** and confirm with (↵).
5. Use (↕↔) to select **SG full bridge** and confirm with (↵).
6. Use (↕↔) to switch to the **Excitation** selection field, press (↵) and select **5V**.
7. Confirm with (↵).
8. Use (↕↔) to switch to the **Unit** selection field and press (↵). Select **kg** as the unit and confirm with (↵).
9. Use (↕↔) to switch to the **Zero point** edit field and enter the value ***0*** in the left edit field. Confirm with (↵).
10. Use (↕↔) to switch to the **Nominal (rated) value** edit field and enter the value ***10*** in the left edit field. Confirm with (↵).

11. Use ⊕ to select the [Adjust amplifier] button and confirm with ⏎.
12. Use the cursor keys ⊕ to select the [measure...] button and confirm with ⏎ .
13. Unload the transducer.
14. In the left edit field for characteristic curve point 1 enter the value ***0*** and confirm with ⏎.
15. Use the cursor key ⊕ to select the [measure] button in line **Point 1** and confirm with ⏎ .
16. Use the cursor key ⊕ to select the left edit field in line **Point 2**, enter the value ***4*** and confirm with ⏎ .
17. Load the transducer with the 4 kg calibration weight.
18. Use the cursor keys ⊕ to select the [measure] button symbol in line **Point 2**. Now if you press ⏎, a measurement starts and the current measured value appears in mv/V on the left next to the [measure] button.
19. Use the cursor keys ⊕ to select the **OK** button and confirm with ⏎ (the amplifier converts the nominal (rated) value to 10 kg. The calibration data for 4 kg remains intact).
20. Use the Switch key (SET) to go to measuring mode and confirm the confirmation prompt with ⏎.

7.3.2 Strain gages

The quantity used to assess material stresses is the mechanical stress to which the material is exposed. One practicable method for experimentally determining material stresses is based on strain gages (SG). A detailed description of SG technology can be found in the book "An Introduction to the Technology of Measuring with Strain Gages" (author Karl Hoffmann, published by HBM Darmstadt).

The resistance of the SG changes due to strain. Since this change lies in the mΩ and µΩ range, a "Wheatstone bridge" must be used with great accuracy.

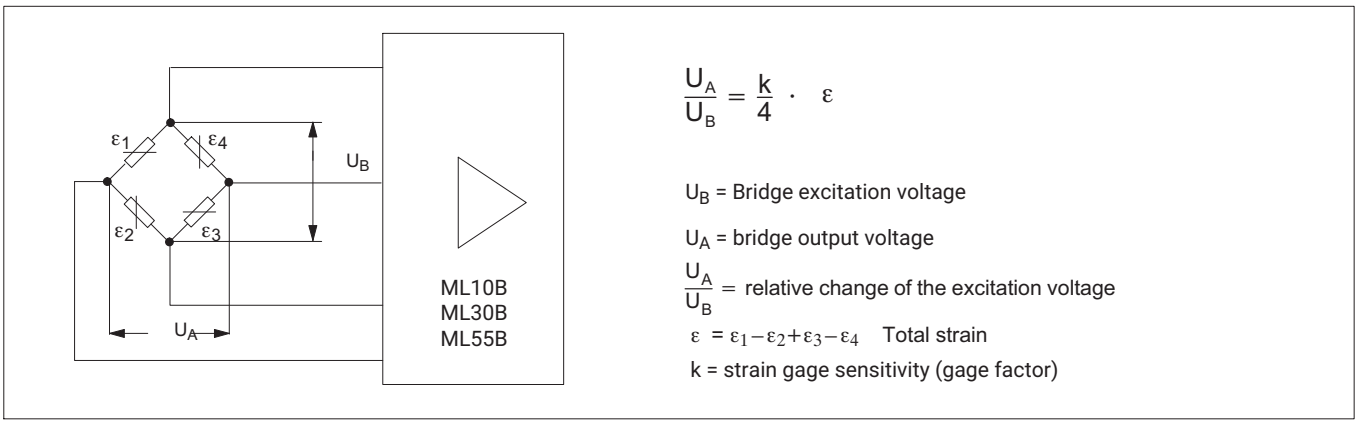

Fig. 7.1 Wheatstone bridge

You can use the MGC*plus* measuring system to measure the strain of one SG or the total strain of multiple SGs. The table below summarizes the possible bridge circuits and the necessary device configuration:

Bridge type	Number of active strain gages	Total strain	Connection board	Amplifier
Quarter bridge circuit	1	ε	AP14	ML10B, ML30B, ML55B[1)]
Half bridge circuit 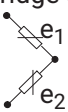	2	$\varepsilon = \varepsilon_1 - \varepsilon_2$	AP01i, AP03i, AP14	ML10B, ML55B[1)] ML30B (only with AP14)
Full bridge circuit 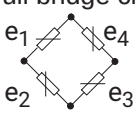	4	$\varepsilon = \varepsilon_1 - \varepsilon_2 + \varepsilon_3 - \varepsilon_4$	AP01i, AP03i, AP14	ML10B, ML30B, ML55B[1)], ML38B[2)]

1) For the combination of ML55B with AP14, a one-time zero calibration must always be performed after setting up the measurement chain.
2) Only in combination with AP01i and AP03i

The measurement system always measures the total strain (ε) of the individual SGs active in the Wheatstone bridge. Individual SGs are usually used for mechanical stress analysis in practical applications.

The half bridge circuit and full bridge circuit are used on account of temperature compensation, the larger measurement signal, better cable resistance compensation and for some stress states (measuring on a bending beam, etc.). The most important characteristic value of a SG is the gage factor. The MGC*plus* measurement system automatically switches to strain measurements if a gage factor >0 is entered. The zero point and measuring range are scaled in μm/m. By changing the unit and the display value you can derive other physical quantity quantities (such as mechanical stress in N/mm^2). If zero is entered as a gage factor, the system switches to mV/V.

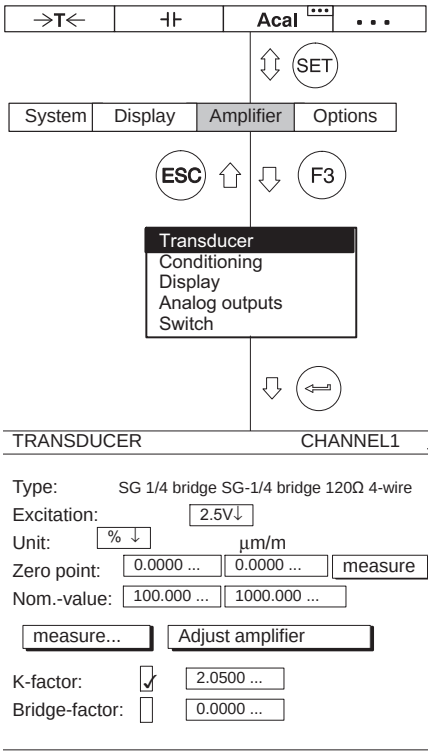

7.3.2.1 Direct entry of transducer characteristics

Example: Using 120 Ω individual strain gages, up to 1000 µm/will be measured. The gage factor of the strain gage is 2.05. The excitation voltage plays no role in this example. The setting is described for 2.5 V.

1. Use the channel selection keys (+ CHANNEL -) or a direct entry to choose the desired channel (for example 3.2 (⇦)).
2. Use the Switch key (SET) to switch to Setup mode.
3. Press (F3).
4. In the pull-up menu select **Transducer** and confirm with (⇦).
5. In the pull-up menu select **Type**.
6. Select type in selection field: **SG-1/4 bridge 120Ω 4-wire**. In the **Excitation** selection field choose **2.5 V**.
7. Use (◆) to select the **K-factor** edit field and enter the value ***2.05***. Press the confirmation button (⇦).

   Since the amplifier automatically changes the basic unit from mV/V to µm/m after the gage factor is entered, the physical quantity plays no role in this example. The menu window shown here is based on the display in the factory settings.

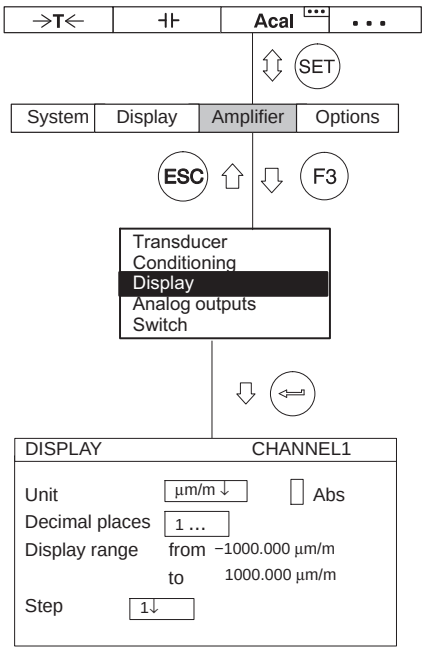

8. Use ◆ to switch to the right edit field **Zero point** and enter the value ***0***. Confirm with ↵.
9. Use ◆ to switch to the right edit field **Nominal (rated) value** and enter the value ***1000***. Confirm with ↵.
10. Use ◆ to select the [Adjust amplifier] button and confirm with ↵.
11. Press F3.
12. In the pull-up menu select **Display** and confirm with ↵.
13. In the **Unit** selection field select **µm/m** and confirm with ↵.
14. Use ◆ to go to the **Abs** activation field and deactivate the absolute display with ↵.
15. In the **Decimal places** edit field enter the desired number of decimal places and confirm with ↵.
16. In the **Step** selection field select the desired step and confirm with ↵.

Information

The step refers to the last decimal place of the display value.

Example:
Entry 1000.0 µm/m
→ Step 1 means display jumps every 100 µm/m
→ Step 5 means display jumps every 500 µm/m

Entry 10.000 µm/m
→ Step 1 means display jumps every 1 µm/m
→ Step 5 means display jumps every 5 µm/m

17. Use the Switch key SET to go to measuring mode and confirm the confirmation prompt with ↵.
18. Perform a zero balance in unloaded state (F1 function key in the factory settings).

7.3.3 Inductive transducers

Inductive transducers (for example force transducer from HBM) are passive transducers that have the following features:

- They must be supplied with an excitation voltage (carrier frequency)
- They are inductive half or full bridge circuits
- The transducer is identified by the following data:
  - Nominal (rated) displacement (for example 20 mm)
  - Nominal (rated) sensitivity (for example 10 mV/V)

The standard setting for the excitation voltage U_B with inductive transducers is 2.5 V. If higher measuring ranges are required or multiple transducers are connected in parallel, a lower excitation voltage must be selected. The individual values depend on which module is used.

Amplifier	Measuring range limits (mV/V)		
	U_B=5 V	U_B=2.5 V	U_B=1 V
ML55B	±1.5...45.9	±3.0...91.8	±7.5...229.5

With these measuring range limits, depending on the setting, a voltage of 1 V ... 10 V can be generated on the analog output.

Important

The specified full scale values are maximum values that cannot be affected by settings of the analog output!

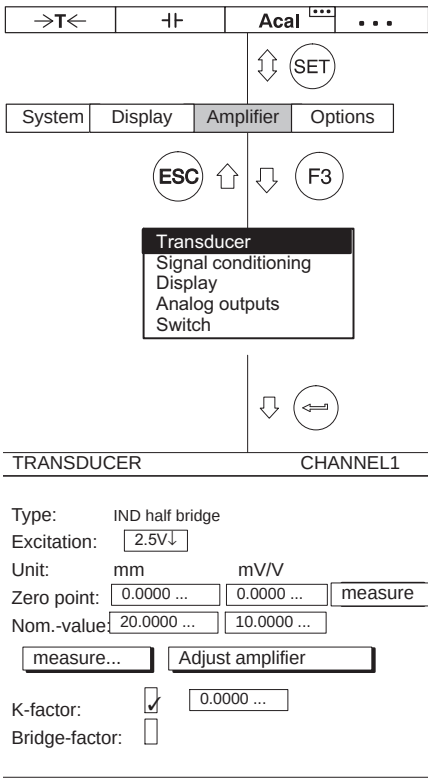

7.3.3.1 Direct entry of transducer characteristics

The example below illustrates the settings for a displacement transducer:

Nominal (rated) displacement 20 mm, excitation voltage 2.5 V, nominal (rated) value 10 mV/V.

1. Use the channel selection keys (+ / - CHANNEL) or a direct entry to choose the desired channel (for example ***3.2*** (⏎))**..**
2. Use (SET) to switch to Setup mode.
3. Press the (F3) function key.
4. In the pull-up menu select **Transducer** and confirm with (⏎).
5. Use (◆) to select **IND half bridge** and confirm with (⏎).
6. Use (◆) to switch to the **Excitation** selection field, press (⏎) and select **2.5V**.
7. Confirm with (⏎).
8. Use (◆) to switch to the **Unit** selection field and press (⏎). Select **mm** as the unit and confirm with (⏎).
9. Use (◆) to switch to the **Zero point** edit field and enter the value ***0*** in the left edit field. Confirm with (⏎).
10. Move the transducer to the zero position.
11. Use (◆) to switch to the [measure] button and confirm with (⏎) (the measured value appears in the right edit field of **Zero point**)

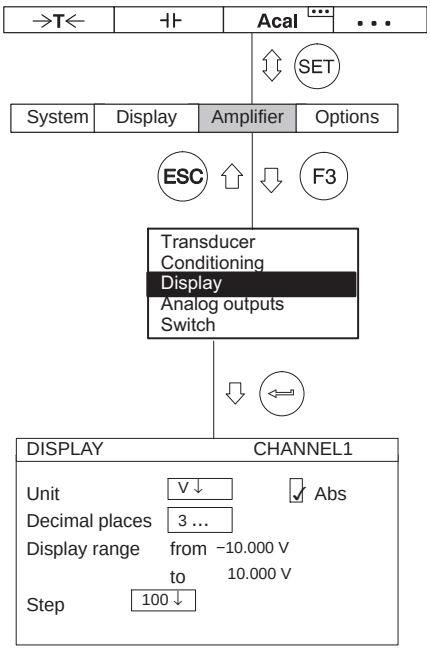

12. In the left edit field **Nominal (rated) value** enter the value ***20***.
13. In the right edit field **Nominal (rated) value** enter the value ***10*** (under the unit **mV/V**).
14. Use ⊕ to select the [Adjust amplifier] button and confirm with ↵. If you do not want to make any more changes to the display, you can now continue with step 20.
15. Go back to the pull-up menu with F3.
16. In the pull-up menu select **Display** and confirm with ↵.
17. In the **Decimal places** edit field enter the desired number of decimal places and confirm with ↵.
18. In the **Step** selection field select the desired step and confirm with ↵.

Information

The step refers to the last decimal place of the display value.

Example:

Entry 10.0 mm
→ Step 1 means display jumps every 0.1mm
→ Step 5 means display jumps every 0.5mm

Entry 10.000 mm
→ Step 1 means display jumps every 0.001mm
→ Step 5 means display jumps every 0.005mm

19. Go back to the pull-up menu with F3.
20. Use the Switch key SET to go to measuring mode and confirm the confirmation prompt with ↵.

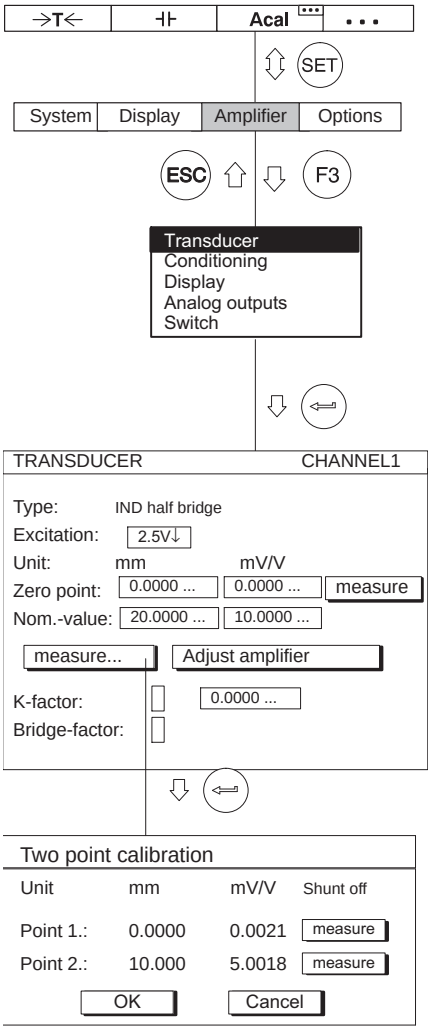

7.3.3.2 Calibrating the characteristic curve of the transducer

By transferring the signals supplied by the transducer at a defined deflection

Example: A displacement transducer with a nominal (rated) displacement of 20 mm (nominal (rated) value 10 mV/V) is set with a gaging block of 10 mm, but the measuring range should be 15 mm.

Information

If the zero point and nominal (rated) sensitivity are not changed (for example in a recalibration), you can skip steps 1-12.

1. Move the transducer to the zero position.
2. Use CHANNEL or a direct entry to choose the desired channel (for example ***3.2***).
3. Use SET to switch to Setup mode.
4. Press F3.
5. In the pull-up menu select **Transducer** and confirm with .
6. Use to switch to the **Excitation** selection field, press and select **2.5V**.
7. Confirm with .
8. Use to switch to the **Unit** selection field and press . Select **mm** as the unit and confirm with .
9. Use to switch to the **Zero point** edit field and enter the value ***0*** in the left edit field. Confirm with .

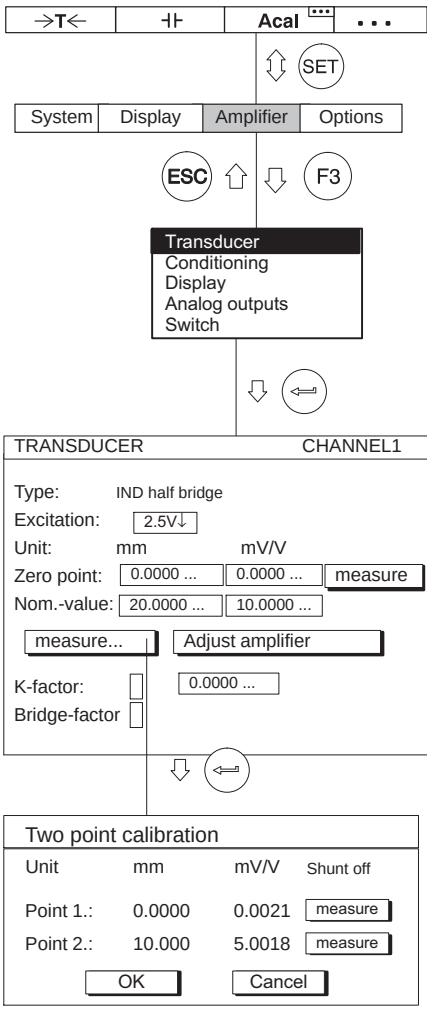

10. Use ⇕⇔ to switch to the [measure] button and confirm with ⏎ (the measured value appears in the right edit field of **Zero point**)
11. In the left edit field **Nominal (rated) value** enter the value ***20*** (under the unit **mm**) and confirm with ⏎.
12. Use ⇕⇔ to select the [Adjust amplifier] button and confirm with ⏎.
13. Use the cursor keys ⇕⇔ to select the [measure...] button and confirm with ⏎.
14. Move the transducer to the zero position.
15. In the left edit field for characteristic curve point 1 enter the value ***0*** and confirm with ⏎.
16. Use the cursor key ⇕⇔ to select the [measure] button in line **Point 1** and confirm with ⏎.
17. Use the cursor key ⇕⇔ to select the left edit field in line **Point 2**, enter the value ***10*** and confirm with ⏎.
18. Position the gaging block under the probe tip of the displacement transducer.
19. Use the cursor keys ⇕⇔ to select the [measure] button symbol in line **Point 2**. Now if you press ⏎, a measurement starts and the current measured value appears in mV/V on the left next to the button [measure]

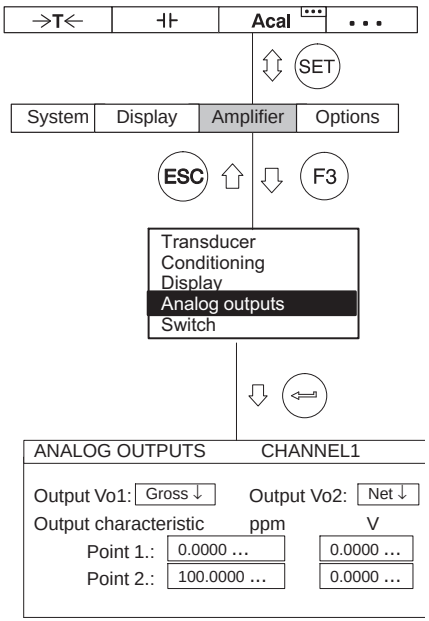

20. Use ⊕ to select the **OK** button and confirm with ↵ (the amplifier converts the nominal (rated) value to 20 mm. The calibration data for 10 mm remains intact).
21. Go back to the pull-up menu with F3.
22. In the pull-up menu select **Analog outputs** and confirm with ↵.
23. In the **Output Vo1** selection field select the gross signal and confirm with ↵.
24. In the **Output Vo2** selection field select the desired signal and confirm with ↵.
25. Use ⊕ to select the **Output characteristic** edit fields and enter the desired values (left ***15*** for the display, right ***10*** for the analog output). Confirm with ↵.
26. Use the Switch key SET to go to measuring mode and confirm the confirmation prompt with ↵.

7.3.4 Torque transducer

Torque transducers with different measurement principles require different amplifier modules in the MGC*plus* system and therefore different operating steps.

The HBM torque transducers in the type series T4A, T5 and TB1A work with SG full bridge circuits. The procedure described in ➔ *section 7.3.1 "SG transducers", page 129* must be followed to adapt the torque channel (ML10B, ML30B, ML38B, ML55B) of these measurement shafts.

The adaptation of the speed channels (ML60B) corresponds to the procedure described in this section.

The HBM torque flanges in type series T10…(without the -KF1 version), T12/T12HP and T40… require connection board AP17 for operation with ML60B amplifier modules (one amplifier module each for torque and rotational speed).

For calculating additional parameters, such as the rotation output (product of torque and rotational speed), it is recommended to use "online calculation channels" in the HBM catman data acquisition software.

PWM (pulse width modulation)

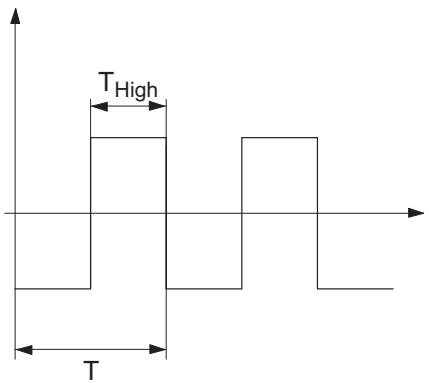

In pulse width modulation the ratio of the pulse duration (T_{High}) to the period time (T) is evaluated (duty ratio).

The measuring range is 0 % ...100 duty ratio.

Duration

Only the absolute pulse duration (T_{High}) is evaluated for the pulse duration. The measuring range is 0 ... 2500 ms.

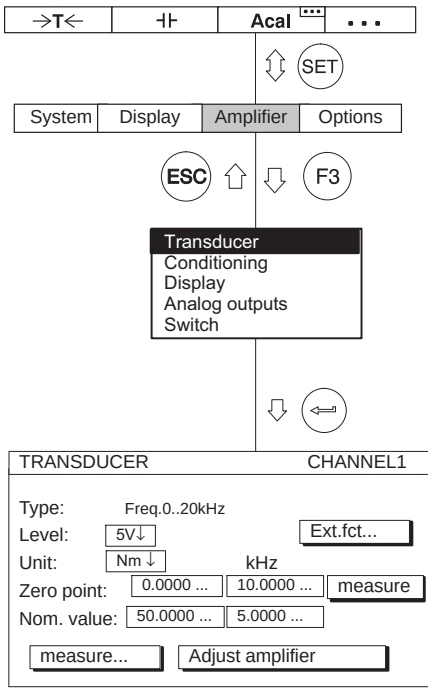

7.3.4.1 Direct entry of torque characteristics

The following example explains the operating steps for adjusting the torque, rotational speed and power channel. Explanation of the extended functions can be found on ➔ *page 151*.

Nominal (rated) torque of the shaft:	50N·m
Nominal (rated) sensitivity:	5kHz
Calibration value:	24.22Nm
Nominal (rated) torque:	3000rpm
Rotational speed range to be displayed for the application:	2000rpm
Display range for power:	10kW

1. Use (+ / - CHANNEL) or a direct entry to choose the desired channel (for example 1 (↵)).
2. Use (SET) to switch to Setup mode.
3. Press the (F3) function key.
4. In the pull-up menu select **Transducer** and confirm with (↵).
5. Use (◆) to select **Freq.0...20kHz** and confirm with (↵).
6. Use (◆) to switch to the **Level** selection field, press (↵) and select **5V**. Confirm with (↵).
7. Use (◆) to switch to the **Unit** selection field and press (↵). Select **N·m** as the unit and confirm with (↵).

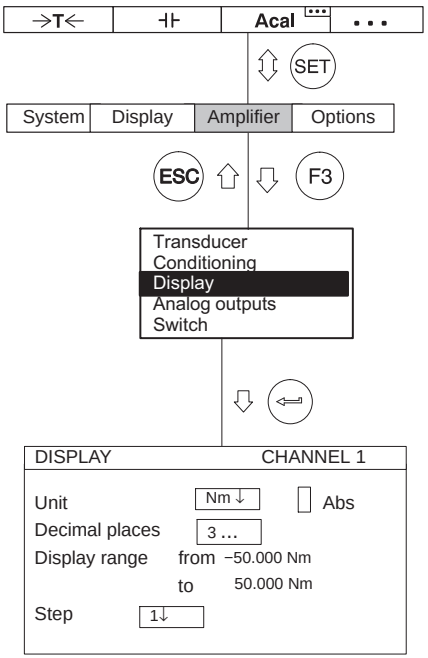

8. In the left edit field **Zero point** enter the value ***0***.
9. In the right edit field **Zero point** enter the value ***10*** (or if the transducer is unloaded activate the measure button).
10. In the left edit field **Nominal (rated) value** enter the value ***50***.
11. In the right edit field **Nominal (rated) value** enter the value ***5***.
12. Use ⇕ to select the Adjust amplifier button and confirm with ↵. If you do not want to make any more changes to the display, you can now continue with step 17.
13. Go back to the pull-up menu with F3.
14. In the pull-up menu select **Display** and confirm with ↵.
15. In the **Decimal places** edit field enter the desired number of decimal places and confirm with ↵.
16. In the **Step** selection field select the desired step and confirm with ↵.
17. Use the Switch key SET to go to measuring mode and confirm the confirmation prompt with ↵.

Information

The step refers to the last decimal place of the display value.

Example:

Entry 50.0 N·m
→ Step 1 means display jumps every 0.1N·m
→ Step 5 means display jumps every 0.5N·m

Entry 50.000 N·m
→ Step 1 means display jumps every 0.001N·m
→ Step 5 means display jumps every 0.005N·m

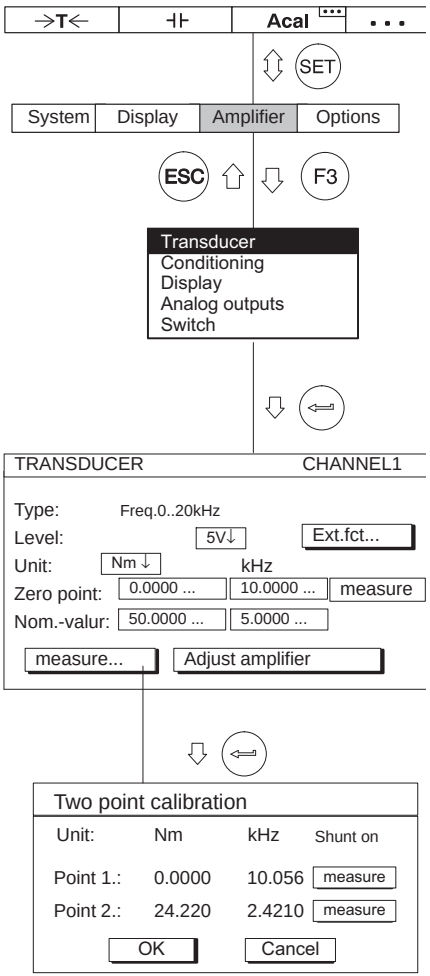

7.3.4.2 Calibration with shunt installed

Information

If the zero point and nominal (rated) torque are not changed (for example in a recalibration), you can skip steps 1.-9.

1. Use (+ CHANNEL -) or a direct entry to choose the desired channel (for example ***3.2*** (↵)).
2. Use (SET) to switch to Setup mode.
3. Press the (F3) function key.
4. In the pull-up menu select **Transducer** and confirm with (↵).
5. Use (◆) to select **Freq.0...20 kHz** and confirm with (↵).
6. Use (◆) to switch to the **Level** selection field, press (↵) and select **5V**. Confirm with (↵).
7. Use (◆) to switch to the **Unit** selection field and press (↵). Select **N·m** as the unit and confirm with (↵).
8. In the left edit field **Nominal (rated) value** enter the value ***50***.

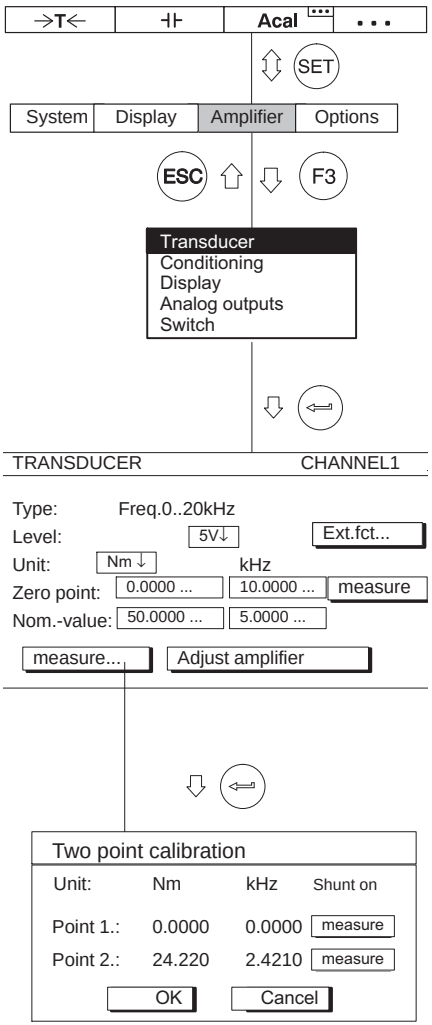

9. Use to select the **Adjust amplifier** button and confirm with .
10. Use to select the measure... button and confirm with .
11. Unload the transducer.
12. In the left edit field for characteristic curve point 1 enter the value ***0*** and confirm with .
13. Use the cursor key to select the measure button in line "Point 1" and confirm with .
14. Use to switch to the **Shunt off** selection field, press and select **Shunt on**. Confirm with .
15. Use to select the measure button symbol in line **Point 2**. Now if you press a measurement starts and the current measured value appears in kHz on the left next to the measure button symbol.
16. Use to select the left edit field in line **Point 2**. Enter the calibration value ***24.22*** and confirm with
17. Use to select the **OK** button symbol and confirm with (the amplifier converts the nominal (rated) value to 50 N·m. The calibration data for 25 N·m remains intact).
18. In the pull-up menu select **Display** and confirm with .
19. In the **Decimal places** edit field enter the desired number of decimal places and confirm with .
20. In the **Step** selection field select the desired step and confirm with .

Information

The step refers to the last decimal place of the display value.

Example:

Entry 50.0 N·m
→ Step 1 means display jumps every 0.1N·m
→ Step 5 means display jumps every 0.5N·m

Entry 50.000 N·m
→ Step 1 means display jumps every 0.001N·m
→ Step 5 means display jumps every 0.005N·m

21. Use the Switch key (SET) to go to measuring mode and confirm the confirmation prompt with (⇦).

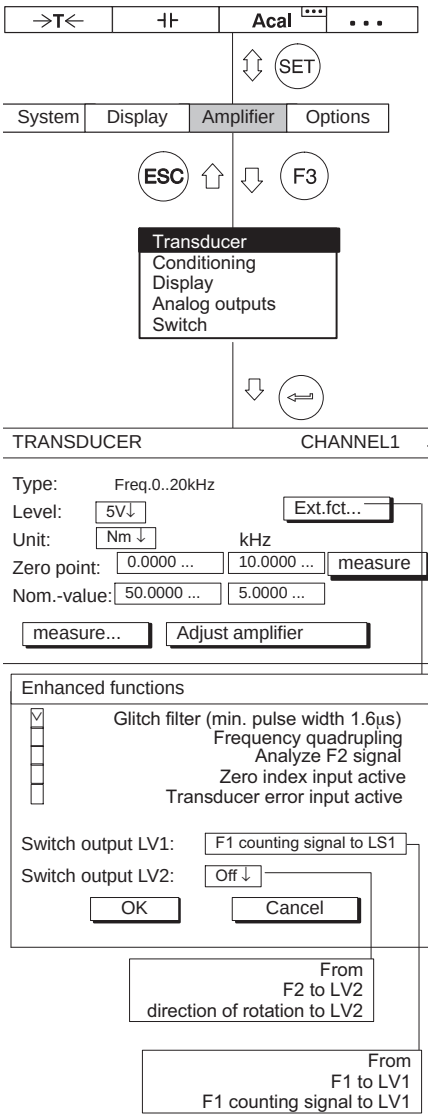

"Extended functions" setup window:

Glitch filter (ML60B only)

When this filter is turned on interference signals with pulse widths less than 1.6µs are suppressed.

Switch output LV1 (ML60B only)

The frequency signal F1 or the counting signal can be applied to the switch output of limit switch 1 (see illustration).

States of switch output LV1

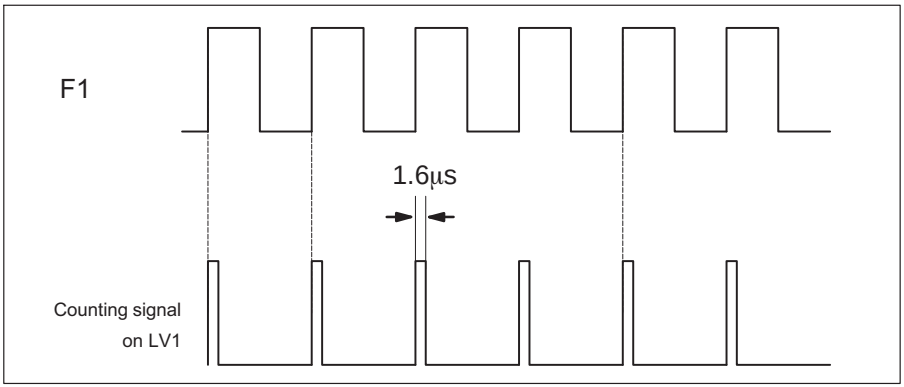

All extended functions not mentioned here are not relevant for torque measurements and should be deactivated (factory settings).

7.3.5 Adjusting the rotational speed channel, frequency measurement

The following calculation is required to adjust the torque channel:

Nominal (rated) rotational speed: n_A = 3000 rpm

Number of pulses/revolution: i = 360 (see table below, type T10F)

$$\frac{n_A \times i}{60} = \text{Pulse frequency}$$

In this example:

$$\frac{3000 \times 360}{60} = 18{,}000 \text{ Hz}$$

i.e. a frequency up to 18,000 Hz must be measured.

Torque measurement shaft	**Number of pulses per revolution** (two outputs offset by 90°)
T4WA	90
T10F…	15...720/15...360 [1)]
T12/T12HP	30 … 360/60…720[1)]
T40B/T40FM	1024
T40FH	72/86

[1)] For details see product documentation

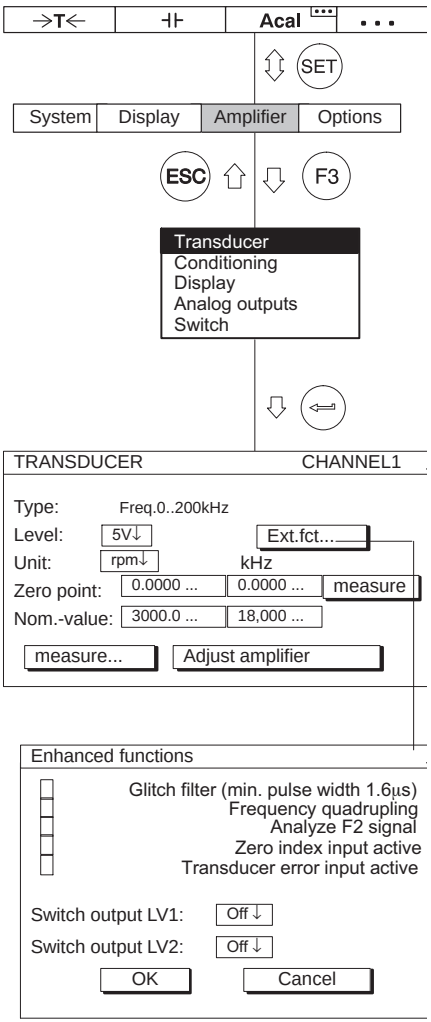

1. Use CHANNEL or a direct entry to choose the desired channel (for example 3.2 ↵).
2. Use the Switch key SET to switch to Setup mode.
3. Press the F3 function key.
4. In the pull-up menu select **Transducer** and confirm with ↵.
5. Use ✥ to select **Freq.0...200kHz** and confirm with ↵.
6. Use ✥ to switch to the **Level** selection field, press ↵ and select **5V**. Confirm with ↵.

Information

Information about the extended functions (Ext.fct...) can be found on ➔ *page 151*.

7. Use ✥ to switch to the **Unit** selection field and press ↵. Select **rpm** as the unit and confirm with ↵.
8. In the **Zero point** edit field enter the value ***0*** (left column **rpm** and right column **kHz**).
9. In the left edit field **Nominal (rated) value** enter the value ***3000***.
10. In the right edit field **Nominal (rated) value** enter the value ***18***.
11. Use ✥ to select the Adjust amplifier button and confirm with ↵. If you do not want to make any more changes to the display, you can now continue with step 16..
12. Go back to the pull-up menu with F3.
13. In the pull-up menu select **Display** and confirm with ↵.

14. In the **Decimal places** edit field enter the desired number of decimal places and confirm with ⏎.

15. In the **Step** selection field select the desired step and confirm with ⏎.

Information

The step refers to the last decimal place of the display value.

Example:

Entry 1000.0 rpm
→ Step 1 means display jumps every 0.1rpm
→ Step 5 means display jumps every 0.5rpm

Entry 1000.000 rpm
→ Step 1 means display jumps every 0.001rpm
→ Step 5 means display jumps every 0.005rpm

16. Use the Switch key SET to go to measuring mode and confirm the confirmation prompt with ⏎.

7.3.6 Adjusting the rotational speed channel, power measurement

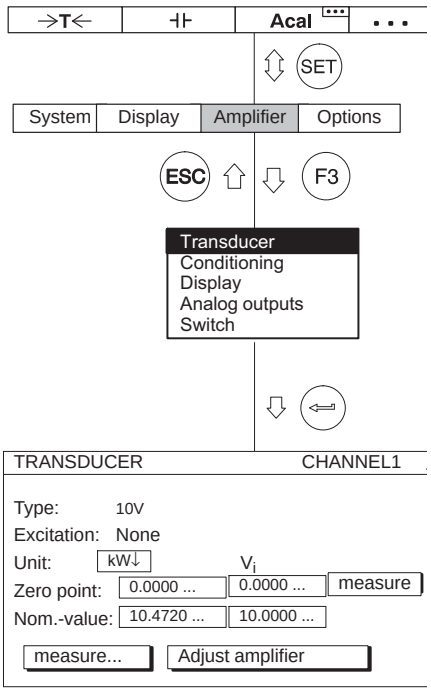

1. Use CHANNEL or a direct entry to choose the desired channel (for example 3.2).
2. Use SET to switch to Setup mode.
3. Press the F3 function key.
4. In the pull-up menu select **Transducer** and confirm with .
5. Use to select **10V** and confirm with .
6. Use to switch to the **Unit** selection field and press . Select **kW** as the unit and confirm with .
7. In the left edit field **Nominal (rated) value** enter the value ***10.472***.
8. In the right edit field **Nominal (rated) value** enter the value ***10***.
9. Use to select the Adjust amplifier button and confirm with . If you do not want to make any more changes to the display, you can now continue with step 19.
10. Go back to the pull-up menu with F3.
11. In the pull-up menu select **Display** and confirm with .

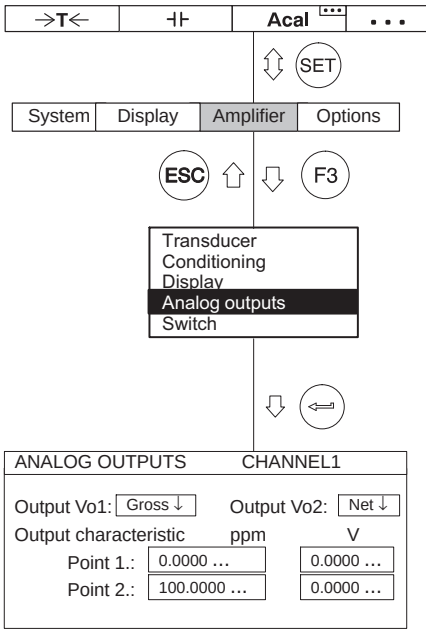

12. In the **Decimal places** edit field enter the desired number of decimal places and confirm with ⏎.

13. In the **Step** selection field select the desired step and confirm with ⏎.

Information

The step refers to the last decimal place of the display value.

Example:

Entry 10.0 kW
→ Step 1 means display jumps every 0.1 kW
→ Step 5 means display jumps every 0.5 kW

Entry 10.000 kW
→ Step 1 means display jumps every 0.001 kW
→ Step 5 means display jumps every 0.005 kW

14. Go back to the pull-up menu with F3.

15. In the pull-up menu select **Analog outputs** and confirm with ⏎.

16. In the **Output Vo1** selection field select the desired signal and confirm with ⏎.

17. In the **Output Vo2** selection field select the desired signal and confirm with ⏎.

18. Use ✥ to select the **Output characteristic** edit fields and enter the desired value ***5*** (left for the display, right for the analog output). Confirm with ⏎.

19. Use the Switch key SET to go to measuring mode and confirm the confirmation prompt with ⏎.

7.3.7 Thermocouples

Thermocouples are active transducers. To perform measurements with thermocouples you will need the ML801B amplifier module as well as connection board AP809. The temperature cold junction is built into the AP809. The amplifier module performs cold-spot compensation and linearization for the selected thermocouple type (beginning with hardware revision 3.00).

If you selected 'Thermocouples' as the operating mode and °C or °F as the unit, the corresponding temperature display will be in the selected unit. If you select operating mode "75 mV", you will have the output voltage of the thermocouple directly (without linearization and cold-spot compensation).

Universal sockets made of copper are used beginning with hardware revision 3.00 to make it possible to connect different thermocouple types. Copper is softer than the miniature thermo connector of thermocouple type K, for example. The following points should therefore be considered:

- Proceed carefully when inserting the plug in the socket
  - Insert it at an angle as close as possible to perpendicular
  - If you can feel resistance, file the edges of the plug slightly to reduce the sharpness of the edges

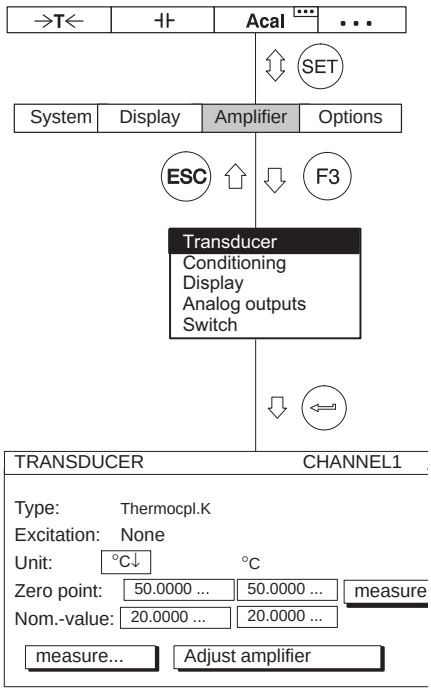

7.3.7.1 Direct entry of transducer characteristics

1. Use CHANNEL or a direct entry to choose the desired channel (for example ***3.2*** ↵).
2. Use SET to switch to Setup mode.
3. Press the F3 function key.
4. In the pull-up menu select **Transducer** and confirm with ↵.
5. Use ◆ to select **Thermocpl.K** and confirm with ↵.
6. Use ◆ to select the Adjust amplifier button and confirm with ↵. If you do not want to make any more changes to the display, you can now continue with step 11.
7. Go back to the pull-up menu with F3.
8. In the pull-up menu select **Display** and confirm with ↵.

9. In the **Decimal places** edit field enter the desired number of decimal places and confirm with ⏎.

10. In the **Step** selection field select the desired step and confirm with ⏎.

Information

The step refers to the last decimal place of the display value.

Example:

Entry 10.0°C
→ Step 1 means display jumps every 0.1°C
→ Step 5 means display jumps every 0.5°C

Entry 50.000 °C
→ Step 1 means display jumps every 0.001°C
→ Step 5 means display jumps every 0.005°C

11. Use the Switch key SET to go to measuring mode and confirm the confirmation prompt with ⏎.

7.3.8 Current and voltage measurement

To measure current and voltage signals you will need amplifier module ML01B or ML801B and AP402i. For simple voltage measurements you can also use the ML801B multi-channel module with connection board AP801 or AP801S6.

The settings are explained with the following example:

A torque transducer with integrated amplifier returns a maximum output signal of 3V, corresponding to a nominal (rated) torque of 20 Nm. The display range will be set to 20.000 Nm. An output signal of 10V is required for control.

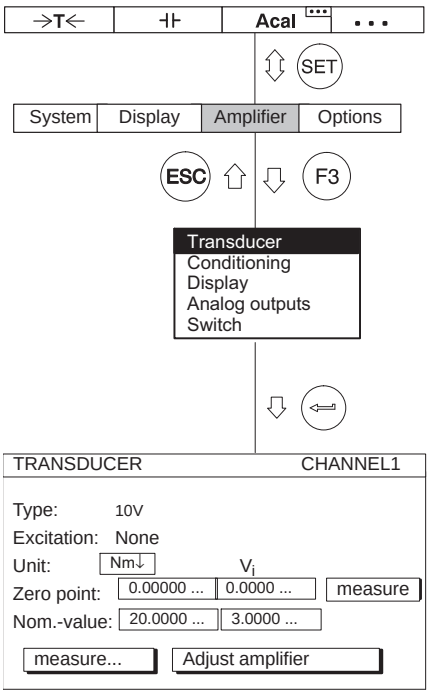

7.3.8.1 Direct entry of transducer characteristics

1. Use CHANNEL or a direct entry to choose the desired channel (for example 3.2 ↵).
2. Use SET to switch to Setup mode.
3. Press the F3 function key.
4. In the pull-up menu select **Transducer** and confirm with ↵.
5. Use ◆ to select **10V** and confirm with ↵.
6. Use ◆ to switch to the **Unit** selection field and press ↵. Select **Nm** as the unit and confirm with ↵.
7. In the left edit field **Zero point** enter the value ***0***.
8. In the right edit field **Zero point** enter the value ***0***.
9. In the left edit field **Nominal (rated) value** enter the value ***20***.
10. In the right edit field **Nominal (rated) value** enter the value ***3***.
11. Use ◆ to select the Adjust amplifier button and confirm with ↵. If you do not want to make any more changes to the display, you can now continue with step 16.
12. Go back to the pull-up menu with F3.
13. In the pull-up menu select **Display** and confirm with ↵.
14. In the **Decimal places** edit field enter the desired number of decimal places and confirm with ↵.

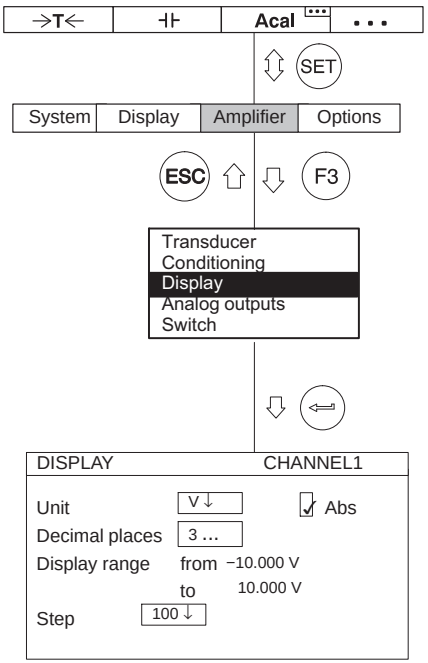

15. In the **Step** selection field select the desired step and confirm with ⏎.

Information

The step refers to the last decimal place of the display value.

Example:

Entry 10.0 Nm
→ Step 1 means display jumps every 0.1 N · m
→ Step 5 means display jumps every 0.5 N · m

Entry 10.000 Nm
→ Step 1 means display jumps every 0.001 N · m
→ Step 5 means display jumps every 0.005 N · m

16. Use the Switch key SET to go to measuring mode and confirm the confirmation prompt with ⏎.

7.3.9 Resistance temperature sensors

Resistance temperature sensors are passive transducers. For this transducer you will need the ML801B multi-channel module with connection board AP835. It performs linearization automatically and indicates the correct temperature.

If you selected 'Resistance temperature sensor' as the operating mode and °C or °F as the unit, the corresponding temperature display will be in degrees of the selected unit. If you choose volts as the unit, the output voltage will be scaled accordingly[1)].

The settings are explained with the following example:

Resistance temperature sensors type Pt100; the temperature will be displayed in °C with a temperature of 50 °C equivalent to an output signal of 0 V. At 70 °C the output signal will be +10 V.

1) The permitted ranges depend on the bridge excitation voltage. If you set a measuring range that lies outside of of the adjustment range of the amplifier, the maximum or minimum value will be applied.

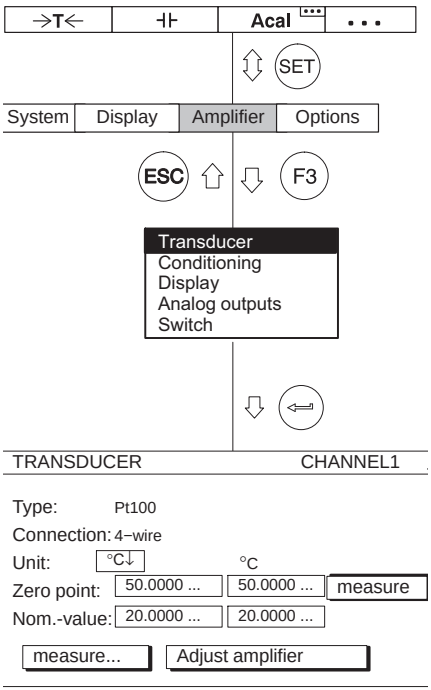

7.3.9.1 Direct entry of transducer characteristics

1. Use CHANNEL or a direct entry to choose the desired channel (for example 3.2 ⇦).
2. Use SET to switch to Setup mode.
3. Press the F3 function key.
4. In the pull-up menu select **Transducer** and confirm with ⇦.
5. Use ◆ to select **Pt100** and confirm with ⇦.
6. In the **Connector** selection field choose the desired connection type.[1)]
7. Use ◆ to switch to the **Unit** selection field and press ⇦. Select **°C** as the unit and confirm with ⇦.
8. In the left edit field **Zero point** enter the value ***50***.
9. In the left edit field **Nominal (rated) value** enter the value ***20*** (70°C-50°C=20°C).
10. Use ◆ to select the Adjust amplifier button and confirm with ⇦. If you do not want to make any more changes to the display, you can now continue with step 15.
11. Go back to the pull-up menu with F3.
12. In the pull-up menu select **Display** and confirm with ⇦.

1) With 4-wire configuration the cable resistance is compensated up to a length of 500m.

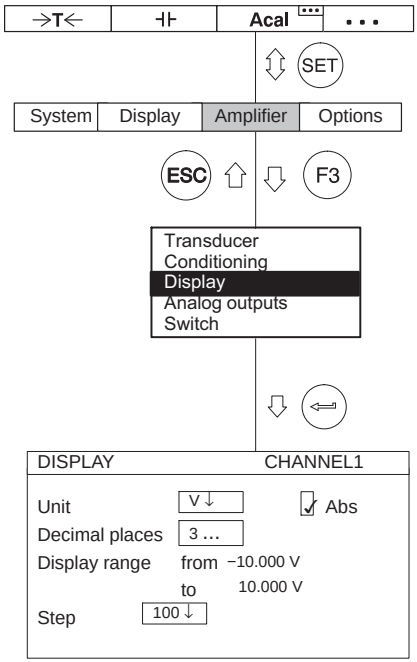

13. In the **Decimal places** edit field enter the desired number of decimal places and confirm with ⏎.

14. In the **Step** selection field select the desired step and confirm with ⏎.

Information

The step refers to the last decimal place of the display value.

Example:

Entry 10.0 °C
→ Step 1 means display jumps every 0.1 °C
→ Step 5 means display jumps every 0.5 °C

Entry 50.000 °C
→ Step 1 means display jumps every 0.001 °C
→ Step 5 means display jumps every 0.005 °C

15. Use the Switch key SET to go to measuring mode and confirm the confirmation prompt with ⏎.

7.3.10 Resistors

Resistors are passive transducers. For these transducers you will need the ML801B amplifier module with AP835, which will provide you with a coarse measuring range (0...500 Ω).

The settings are explained with the following example:

Resistance value 400 Ω, Display full scale 400.00 Ω

7.3.10.1 Direct entry of transducer characteristics

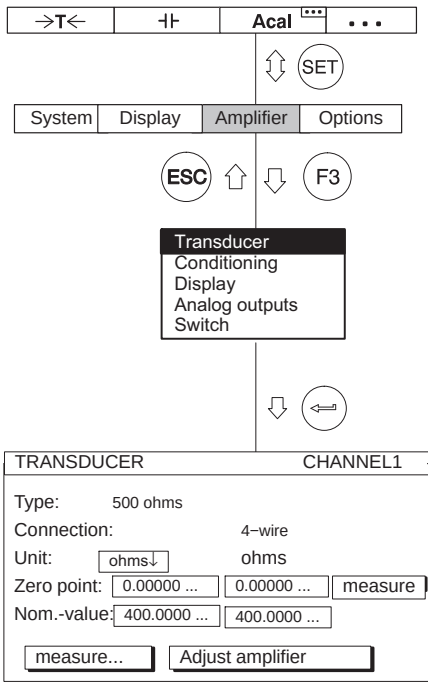

1. Use CHANNEL or a direct entry to choose the desired channel (for example ***3.2***).
2. Use SET to switch to Setup mode.
3. Press the F3 function key.
4. In the pull-up menu select **Transducer** and confirm with .
5. Use to select **500ohms** (this is the input range of the amplifier) and confirm with .
6. In the **Connector** selection field choose the desired connection type.[1)]
7. Use to switch to the **Unit** selection field and press . Select **ohms** as the unit and confirm with .
8. In both the **Zero point** edit fields enter the value ***0***.
9. In the left edit field **Nominal (rated) value** enter the value ***400***.
10. Use to select the Adjust amplifier button and confirm with . If you do not want to make any more changes to the display, you can now continue with step 15.

1) With 4-wire configuration the cable resistance is compensated up to a length of 500m.

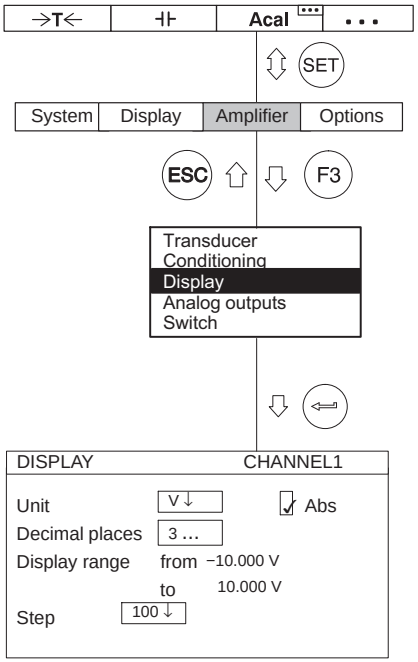

11. Go back to the pull-up menu with F3.

12. In the pull-up menu select **Display** and confirm with ⏎.

13. In the **Decimal places** edit field enter the desired number of decimal places and confirm with ⏎.

14. In the **Step** selection field select the desired step and confirm with ⏎.

Information

The step refers to the last decimal place of the display value.

Example:

Entry 10.0 Ω
→ Step 1 means display jumps every 0.1 Ω
→ Step 5 means display jumps every 0.5 Ω

Entry 10.000 Ω
→ Step 1 means display jumps every 0.001 Ω
→ Step 5 means display jumps every 0.005 Ω

15. Use SET to go to measuring mode and confirm the confirmation prompt with ⏎.

7.3.11 Pulse counting

To count pulses you will need the ML60B amplifier. This amplifier is able to process a maximum pulse string frequency of 1 MHz. Further information about possible settings of this amplifier can be found in ➔ *section 7.3.4 "Torque transducer", page 151*.

Incremental transmitters (used for example to measure angles) return two square wave signals which are phase-shifted by 90°. The duty ratio between the High and Low of the two signals must be about 1:1.

The settings are explained with the following example:

An angle of rotation transmitter returns two signals, each with 180 pulses/ revolution. They will be realized in the display as 360°. Due to the pulse number per revolution, a value of 1 is specified as the step, since a higher revolution is not practical. The level of the square wave signal is 10 V.

In addition to the measured value, a frequency signal with four times the count pulses is required at the output.

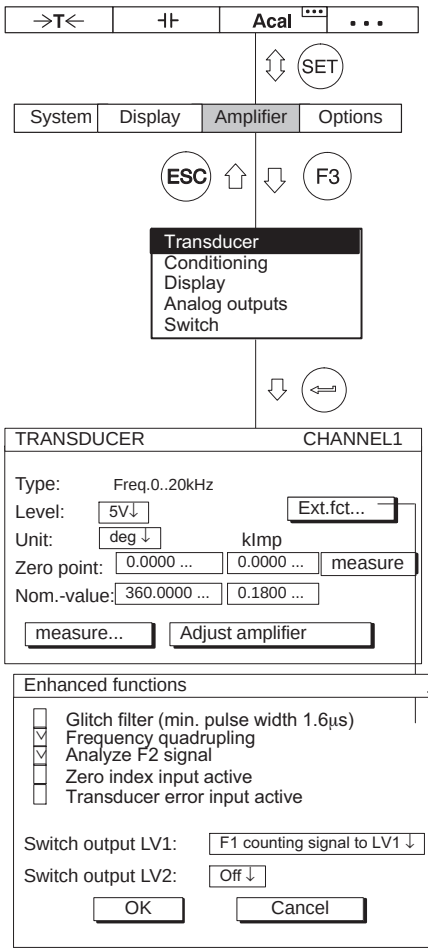

7.3.11.1 Direct entry of transducer characteristics

1. Use CHANNEL or a direct entry to choose the desired channel (for example ***3.2*** ↵).
2. Use SET to switch to Setup mode.
3. Press the F3 function key.
4. In the pull-up menu select **Transducer** and confirm with ↵.
5. Use ◆ to select type **Pulse counter** and confirm with ↵.
6. Use ◆ to switch to the **Level** selection field, press ↵ and select **5V**. Confirm with ↵.
7. Use ◆ to select the Ext. fct. ... button and confirm with ↵ (for explanations of extended functions).➔ *see page 173*)
8. Use ◆ to select the activation fields **Frequency quadrupling** and **Analyze F2 signal** and activate them with ↵.
9. Use ◆ to switch to the **Switch output LV1** selection field, select **F1 Counting signal to LV1** and confirm with ↵.
10. Use ◆ to select the OK button and confirm with ↵.
11. Use ◆ to switch to the **Unit** selection field and press ↵. Select **deg** as the unit and confirm with ↵.
12. In both the **Zero point** edit fields enter the value ***0***.
13. In the left edit field **Nominal (rated) value** enter the value ***360***.
14. In the right edit field **Nominal (rated) value** enter the value ***0.180***.

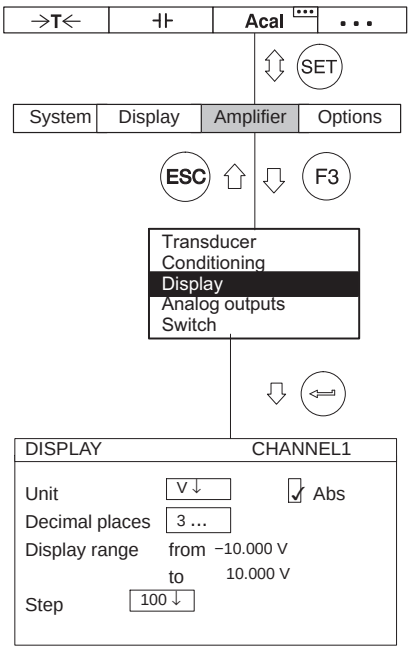

15. Use ⊕ to select the [Adjust amplifier] button and confirm with ⏎. If you do not want to make any more changes to the display, you can now continue with step 20.
16. Go back to the pull-up menu with F3.
17. In the pull-up menu select **Display** and confirm with ⏎.
18. In the **Decimal places** edit field enter the desired number of decimal places and confirm with ⏎.
19. In the **Step** selection field choose **2** (1 pulse is equivalent to 2°; 180 pulses/revolution is equivalent to 360°) and confirm with ⏎.
20. Use SET to go to measuring mode and confirm the confirmation prompt with ⏎.

Assign the **Zero balance** function to a free F-key (factory settings level 1/F1). Then return to measuring mode. If you press the corresponding F-key, the pulse counter is set to "0". ➔ *See also section "Assigning F-keys"; page 226.*

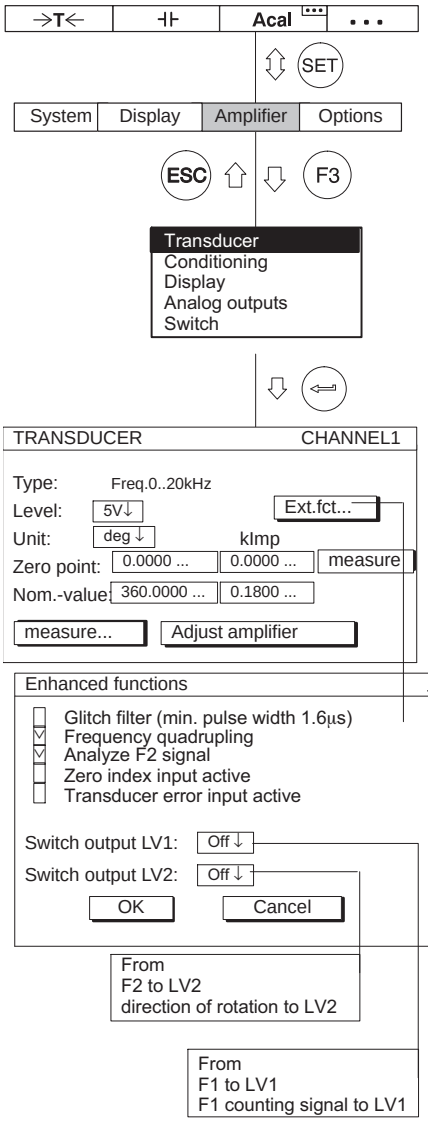

"Extended functions" setup window of the ML60B

Glitch filter (only with ML60B)

When this filter is turned on interference signals with pulse widths less than 1.6 µs are suppressed.

Frequency quadrupling

Frequency quadrupling is equivalent to increasing the signal resolution. Both the positive and negative signal edges are counted. If both frequency inputs (F1 and F2) are connected, the measurement frequency is quadrupled. If F2 is not connected the measurement frequency is doubled.

Analyze F2 signal (direction detection)

The phase-offset signal F2 is analyzed, which makes it possible to display the direction of rotation or the direction of motion.

Zero index input active

For incremental encoders this input is used in counting mode to reset the counter.

Transducer error input active (only with AP01i)

If a signal is present (level 0V), the measured value is interpreted by the amplifier as an error (for example when the light source fails in optical systems).

Switch output LV1 (only with ML60B)

The frequency signal F1 or the counting signal can be applied to the switch output of limit switch 1.

Switch output LV2 (only with ML60B)

The frequency signal F2 or the direction of rotation signal can be applied to the switch output of limit switch 2.

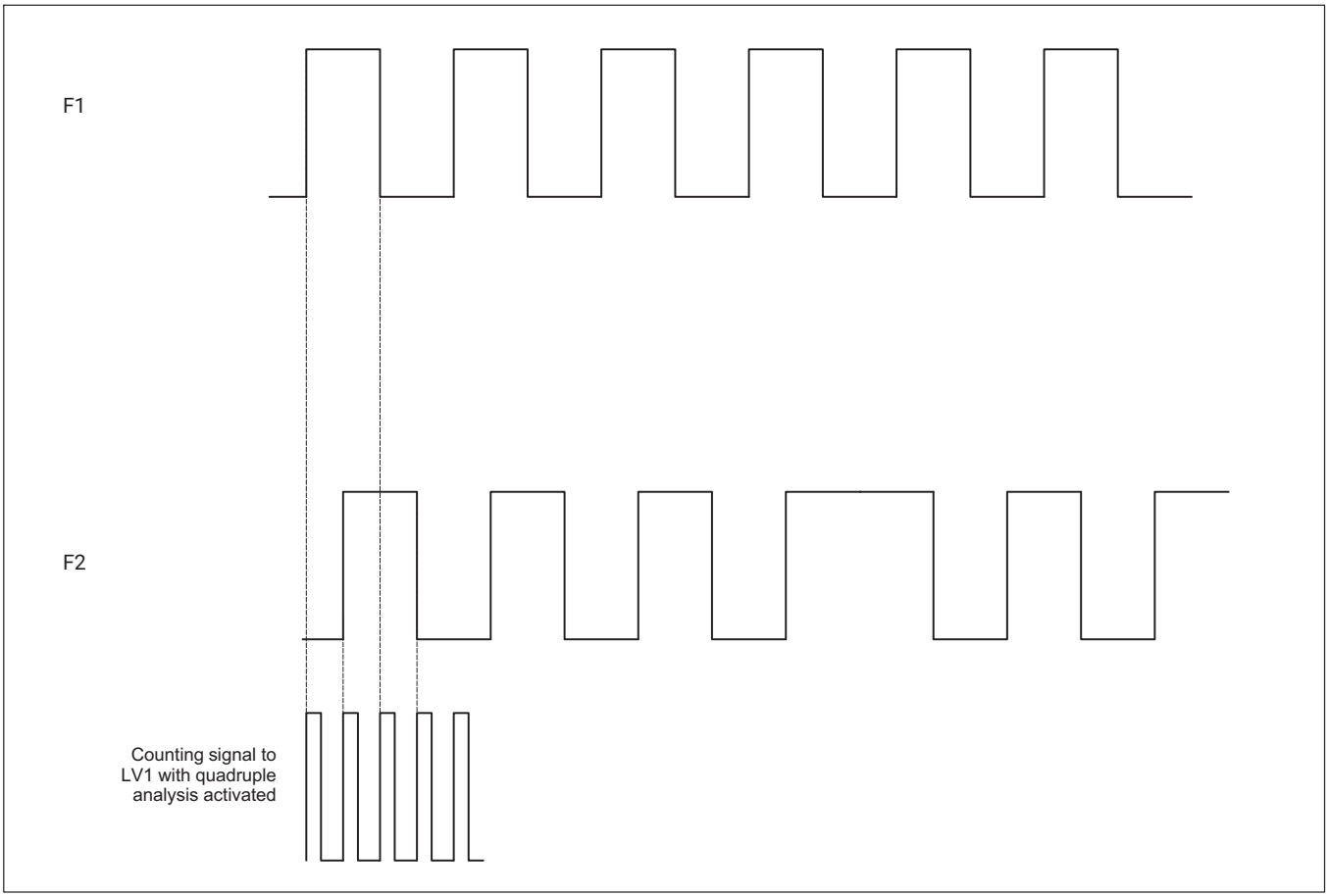
F1
F2
Counting signal to
LV1 with quadruple
analysis activated

7.4 Current-fed piezoelectric transducer

Piezoelectric transducers with a built-in preamplifier are often used for acceleration and force measurements. These transducers require a constant current for supply. The measurement signal corresponds to the modulated voltage on the power line. The DeltaTron™ acceleration transducer from Brüel&Kjaer is a typical representative of this product family.

To operate current-fed piezoelectric transducers you will need the AP418i connection board and the ML810B amplifier. You can select coarse and fine adjustment for the measuring range. 3 input ranges are available for coarse adjustment: ±0.05 V; ±0.5 V; ±5 V.

Example: If the required measuring range is 4 V, the next larger input range ±5 V is set.

The zero point defines the 0 V voltage generated at the output of the amplifier. The nominal (rated) value is always defined relative to the zero point.

The settings are explained with the following example:

A DeltaTron™ transducer will be used to measure an acceleration of up to 300m/s^2. The nominal (rated) value of the transducer is 1mV/ m/s^2.

Measuring range (fine adjustment) 300 m/s^2 x 1 mV/m/s^2 = 0.3 V
Input range (coarse adjustment): ±0.5 V (> 0.3 V)

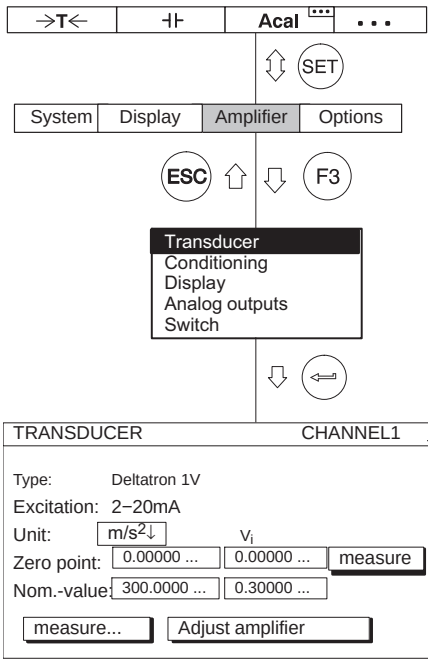

7.4.1 Direct entry of transducer characteristics

1. Use CHANNEL or a direct entry to choose the desired channel (for example ***3.2*** ↵).
2. Use SET to switch to Setup mode.
3. Press the F3 function key.
4. In the pull-up menu select **Transducer** and confirm with ↵.
5. Use ◆ to select transducer type **Deltatron 1V** and confirm with ↵.
6. Use ◆ to switch to the **Unit** selection field and press ↵. Select **m/s²** as the unit and confirm with ↵.
7. In both the **Zero point** edit fields enter the value ***0***.
8. In the left edit field **Nominal (rated) value** enter the value ***300***.
9. In the right edit field **Nominal (rated) value** enter the value ***0.3***.
10. Use ◆ to select the Adjust amplifier button and confirm with ↵. If you do not want to make any more changes to the display or output characteristics, you can now continue with step 15.
11. Go back to the pull-up menu with F3.

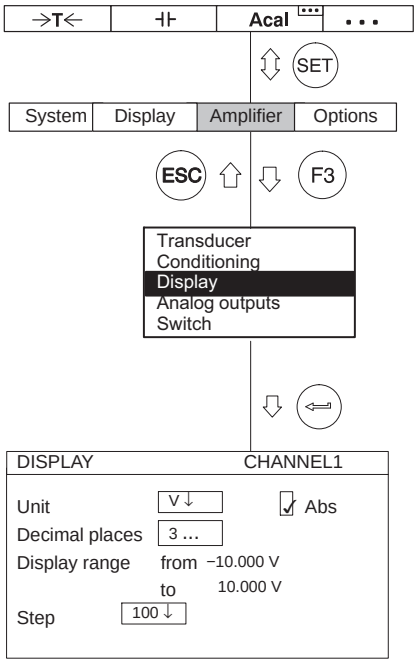

12. In the pull-up menu select **Display** and confirm with ⏎.

13. In the **Decimal places** edit field enter the desired number of decimal places and confirm with ⏎.

14. In the **Step** selection field select the desired step and confirm with ⏎.

Information

The step refers to the last decimal place of the display value.

Example:

Entry 10.0m/s^2
→ Step 1 means display jumps every 0.1 m/s^2
→ Step 5 means display jumps every 0.5 m/s^2

Entry 10.000m/s^2
→ Step 1 means display jumps every 0.001 m/s^2
→ Step 5 means display jumps every 0.005 m/s^2

15. Use SET to go to measuring mode and confirm the confirmation prompt with ⏎.

7.5 Piezoresistive transducers

Piezoresistive transducers are passive transducers. The settings are explained with the following example:

Pressure transducer with characteristics:
Nominal (rated) pressure 300 bar, current feed 10 V, rated output (nominal) 200 mV/V, display range 300 bar, test pressure 250 bar (partial load)

Due to the rated output you must use the ML10B measuring amplifier. The zero point and measuring range can be adjusted either directly using the transducer characteristics or with the test pressure. Both possibilities are described here.

7.5.1 Direct entry of transducer characteristics

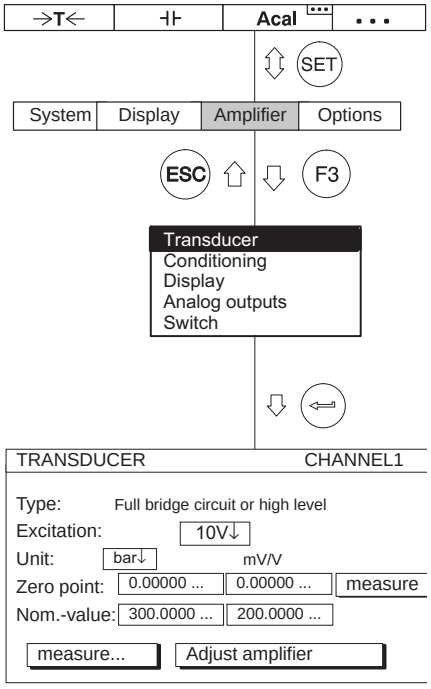

1. Use CHANNEL or a direct entry to choose the desired channel (for example ***3.2*** ↵).
2. Use SET to switch to Setup mode.
3. Press the F3 function key.
4. In the pull-up menu select **Transducer** and confirm with ↵.
5. Use ◆ to select transducer type **Full bridge circuit high level** and confirm with ↵.
6. Use ◆ to switch to the **Current feed** selection field and press ↵. Select **10V** and confirm with ↵.
7. Use ◆ to switch to the **Unit** selection field and press ↵. Select **bar** as the unit and confirm with ↵.
8. In both the **Zero point** edit fields enter the value ***0***.
9. In the left edit field **Nominal (rated) value** enter the value ***300***.

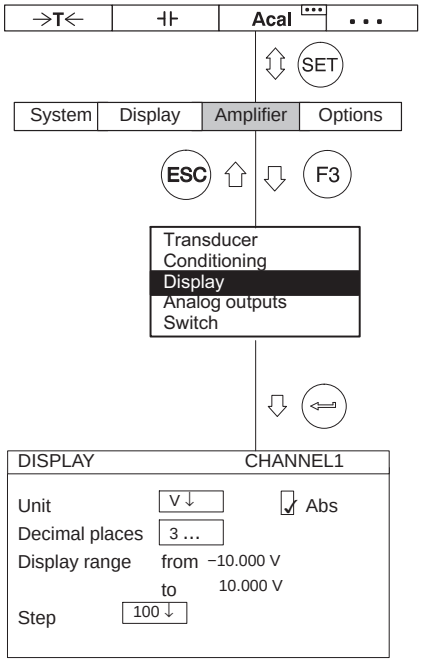

10. In the right edit field **Nominal (rated) value** enter the value ***200***.

11. Use ⊕ to select the [Adjust amplifier] button and confirm with ↵. If you do not want to make any more changes to the display or output characteristics, you can now continue with step 16.

12. Go back to the pull-up menu with F3.

13. In the pull-up menu select **Display** and confirm with ↵.

14. In the **Decimal places** edit field enter the desired number of decimal places and confirm with ↵.

15. In the **Step** selection field select the desired step and confirm with ↵.

16. Use SET to go to measuring mode and confirm the confirmation prompt with ↵.

Information

The step refers to the last decimal place of the display value.

Example:

Entry 10.0bar
→ Step 1 means display jumps every 0.1 bar
→ Step 5 means display jumps every 0.5 bar

Entry 10.000bar
→ Step 1 means display jumps every 0.001 bar
→ Step 5 means display jumps every 0.005 bar

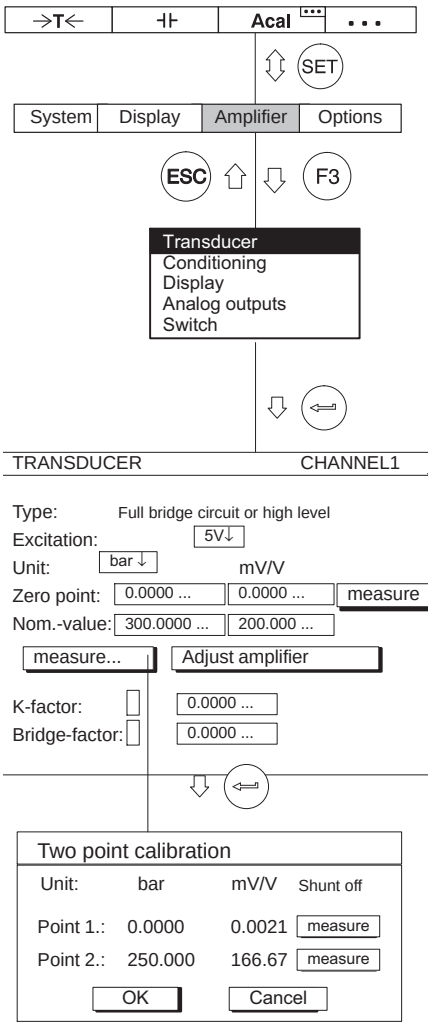

7.5.1.1 Calibrating the characteristic curve of the transducer

Transferring the signals supplied by the transducer at a defined test pressure.

Information

If the zero point and nominal (rated) value are not changed (for example in a recalibration), you can skip steps 1-10.

1. Use CHANNEL + / - or a direct entry to choose the desired channel (for example ***3.2*** ↵).
2. Use SET to switch to Setup mode.
3. Press F3.
4. In the pull-up menu select **Transducer** and confirm with ↵.
5. Use ◆ to switch to the **Excitation** selection field, press ↵ and select **10V**.
6. Confirm with ↵.
7. Use ◆ to switch to the **Unit** selection field and press ↵. Select **bar** as the unit and confirm with ↵.
8. Use ◆ to switch to the **Zero point** edit field and enter the value ***0*** in the left edit field. Confirm with ↵.
9. Use ◆ to switch to the **Nominal (rated) value** edit field and enter the value ***300*** in the left edit field. Confirm with ↵.

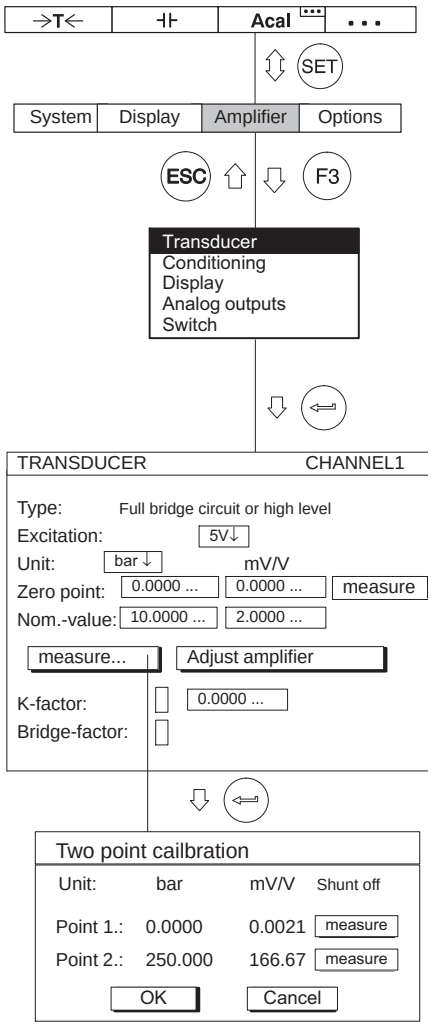

10. Use ⇕⇔ to select the [Adjust amplifier] button and confirm with ⏎.
11. Use the cursor keys ⇕⇔ to select the [measure...] button and confirm with ⏎.
12. Unload the transducer.
13. In the left edit field for characteristic curve point 1 enter the value ***0*** and confirm with ⏎.
14. Use ⇕⇔ to select the [measure] button in line **Point 1** and confirm with ⏎.
15. Use ⇕⇔ to select the left edit field in line **Point 2**, enter the value ***250*** and confirm with ⏎.
16. Apply the test pressure to the transducer.
17. Use the cursor keys ⇕⇔ to select the [measure] button in line **Point 2**. Now if you press ⏎, a measurement starts and the current measured value appears in mv/V on the left next to the [measure] button.
18. Use ⇕⇔ to select the [OK] button and confirm with ⏎ (the amplifier converts the nominal (rated) value to 300 bar. The calibration data for 250 bar remains intact).
19. Use SET to go to measuring mode and confirm the confirmation prompt with ⏎.

7.6 Potentiometric transducers

Potentiometric transducers are passive transducers that must be supplied with an excitation voltage. To work with a potentiometric transducer you will need the ML10B amplifier with AP01i or AP03i, or ML801B with AP836i. Please note that the maximum resistance value is 5 kΩ.

The settings are explained with the following example:

The measurement will be performed with a potentiometric displacement transducer with a nominal (rated) displacement of 10mm. The entire nominal (rated) displacement will be used. The display range is 10 mm.

The dependency of the excitation voltage and nominal (rated) input voltage (mV/V) results in the following correlation for the measuring range to be set with an excitation voltage of 2.5 V:

$$\text{Nominal (rated) value to be set (RANGE)} = \frac{\text{Nom. (rated) voltage (displacement)}}{\text{Excitation voltage}}$$

Nominal (rated) value (range) = 2.5 V/2.5 V = 1000 mV/V

This value of 1000 mV/V or 1 V/V only changes if a potentiometric transducer is used with a partial range.

In the second method, a partial range calibration is performed with gage blocks of 7 mm for calibrating the zero point and measuring range.

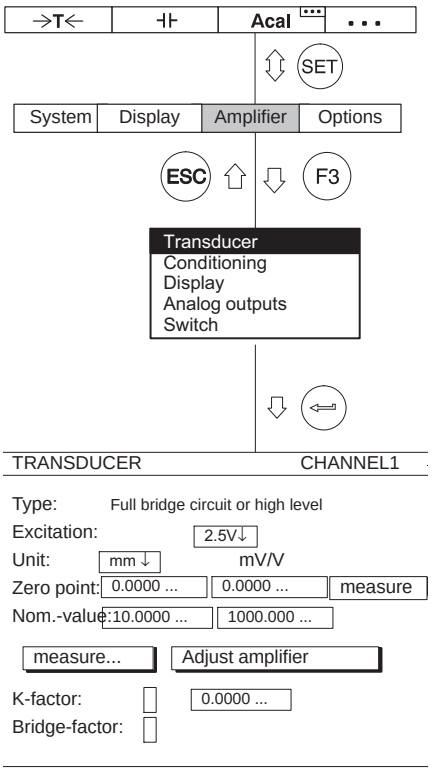

7.6.1 Direct entry of transducer characteristics

1. Use CHANNEL or a direct entry to choose the desired channel (for example ***3.2*** ↵).
2. Use SET to switch to Setup mode.
3. Press the F3 function key.
4. In the pull-up menu select **Transducer** and confirm with ↵.
5. Use ◆ to select transducer type **Half bridge circuit high level** and confirm with ↵.
6. Use ◆ to switch to the **Current feed** selection field and press ↵. Select **2.5V** and confirm with ↵.
7. Use ◆ to switch to the **Unit** selection field and press ↵. Select **mm** as the unit and confirm with ↵.
8. In both the **Zero point** edit fields enter the value ***0***.
9. In the left edit field **Nominal (rated) value** enter the value ***10***.
10. In the right edit field **Nominal (rated) value** enter the value ***1000***.
11. Use ◆ to select the Adjust amplifier button and confirm with ↵. If you do not want to make any more changes to the display or output characteristics, you can now continue with step 16.
12. Go back to the pull-up menu with F3.
13. In the pull-up menu select **Display** and confirm with ↵.
14. In the **Decimal places** edit field enter the desired number of decimal places and confirm with ↵.

15. In the **Step** selection field select the desired step and confirm with ⏎.

16. Use SET to go to measuring mode and confirm the confirmation prompt with ⏎.

Information

The step refers to the last decimal place of the display value.

Example:

Entry 10.0mm
→ Step 1 means display jumps every 0.1 mm
→ Step 5 means display jumps every 0.5 mm

Entry 10.000mm
→ Step 1 means display jumps every 0.001 mm
→ Step 5 means display jumps every 0.005 mm

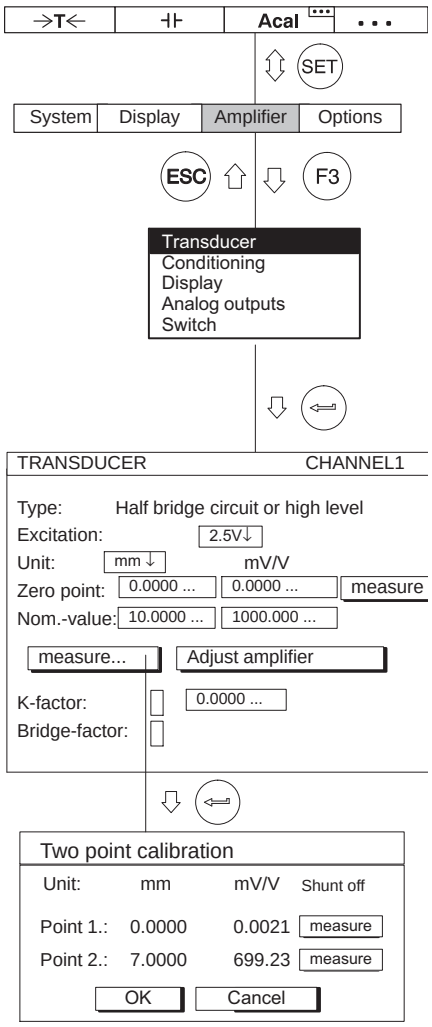

7.6.1.1 Calibrating the characteristic curve of the transducer

Transfer of the signals supplied by the transducer at a defined deflection.

Information

If the zero point and nominal (rated) value are not changed (for example in a recalibration), you can skip steps 1-10.

1. Use CHANNEL or a direct entry to choose the desired channel (for example ***3.2***).
2. Use SET to switch to Setup mode.
3. Press F3.
4. In the pull-up menu select **Transducer** and confirm with .
5. Use to switch to the **Current feed** selection field, press and select **2.5V**.
6. Confirm with .
7. Use to switch to the **Unit** selection field and press . Select **mm** as the unit and confirm with .
8. Use to switch to the **Zero point** edit field and enter the value ***0*** in the left edit field. Confirm with .
9. Use to switch to the **Nominal (rated) value** edit field and enter the value ***10*** in the left edit field. Confirm with .

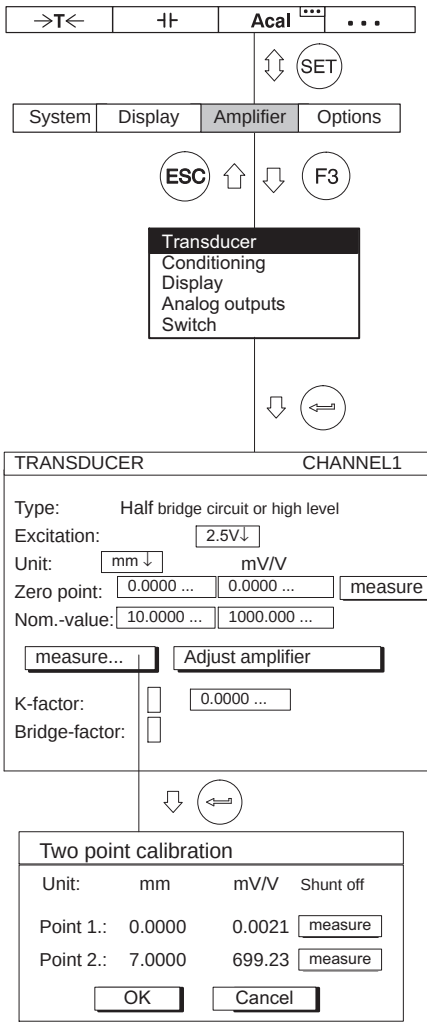

10. Use ⇕⇔ to switch to the right edit field **Nominal (rated) value** and enter the value ***1000***. Confirm with ⏎.
11. Use ⇕⇔ to select the [measure...] button and confirm with ⏎ .
12. Slide the core into the transducer until the display indicates **zero**.
13. In the left edit field for characteristic curve point 1 enter the value ***0*** and confirm with ⏎.
14. Use ⇕⇔ to select the [measure] button in line **Point 1** and confirm with ⏎ .
15. Use the cursor key ⇔ to select the left edit field in line **Point 2**, enter the value ***7*** and confirm with ⏎ .
16. Position the gaging block under the probe tip of the displacement transducer.
17. Use ⇕⇔ to select the [measure] button in line **Point 2**. Now if you press ⏎, a measurement starts and the current measured value appears in mv/V on the left next to the [measure] button.
18. Use ⇕⇔ to select the [OK] button and confirm with ⏎ (the amplifier converts the nominal (rated) value to 10 mm. The calibration data for 7 mm remains intact).
19. Use SET to go to measuring mode and confirm the confirmation prompt with ⏎.

8 ADDITIONAL FUNCTIONS

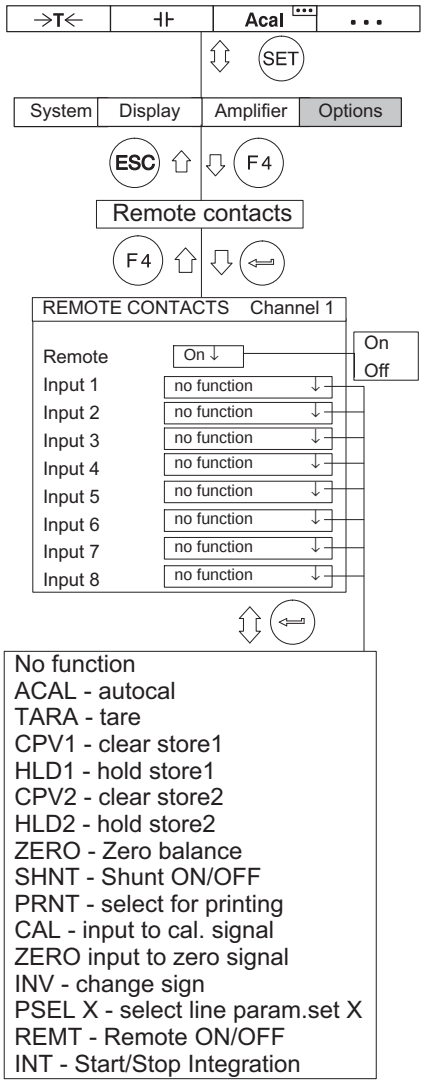

8.1 Remote control (single-channel modules only)

8.1.1 Turning on remote control

The remote control contacts are used to control important functions of the amplifiers via digital inputs. These contacts are only active if remote control is turned on

There are three ways to turn remote control on or off.

- *In measuring mode:* Press the F4 function key twice and then the F1 function key (factory settings).
- *In setup mode:* Press the F3 function key. You can turn remote control on or off in the "Switch" setup window.
- Via the remote control contacts (with the REMT function).

8.1.2 Assigning remote control contacts

The assignment of control contacts is freely selectable. They are not assigned in the factory settings. The table below shows the possible functions with a description of the function.

Function	Level 5V	Level 0V
ACAL	Autocalibration ON	Autocalibration OFF
TARE	The transition from 5V→0V (0V→24V for AP13i) starts with taring	
CPV1/2	Peak value 1/2 is saved	Peak value 1/2 is deleted for the instantaneous value
HLD1/2	Peak-value memory 1/2 free	Content of peak-value memory 1/2 is frozen
ZERO	When the transition from 5V→0V occurs the instantaneous measurement signal is set to zero	
SHNT	Shunt turned off	Shunt turned on
CAL		Input is switched to internal calibration source
ZERO		Input is switched to zero signal
INV		Polarity is reversed (ML60B only)
PSEL1	Select parameter set, coding line 1 (➔ *see Tab. 8.1*)	
PSEL2	Select parameter set, coding line 2 (➔ *see Tab. 8.1*)	
PSEL4	Select parameter set, coding line 4 (➔ *see Tab. 8.1*)	
REMT	Remote control contacts inactive	Remote control contacts active
INT	All connection boards: Integrator is started with the transition from 5V - 0V. The transition from 0V - 5V stops integration. AP13i connection board	

Parameter set selection

PSEL1	PSEL2	PSEL4	Selected parameter set
0	0	0	1
1	0	0	2
0	1	0	3
1	1	0	4
0	0	1	5
1	0	1	6
0	1	1	7
1	1	1	8

Tab. 8.1

0: Remote control contacts not activated; level 5 V

1: Remote control contacts activated; level 0 V; connected to digital ground

8.2 Limit values (single-channel modules only)

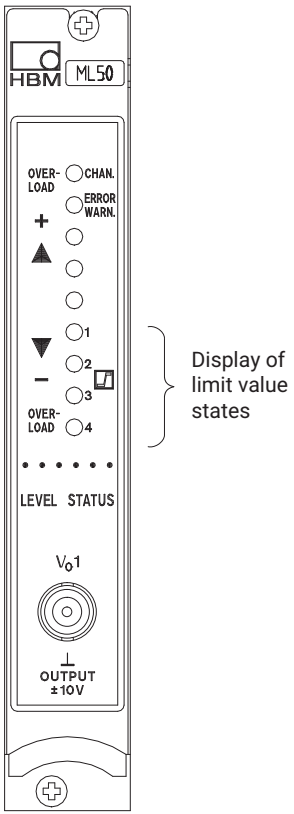

To assess dimensional or weight tolerances, or when monitoring forces, pressures etc., it is often necessary to comply with specific setpoint or limit values. Four limit switches are available for this in each amplifier module (they are turned off in the factory settings).

You can assign the level, hysteresis and its direction for limit value monitoring. The hysteresis value prevents the limit switch from "flickering" when the switching threshold is reached.

The respective switching status is indicated by an LED on the front panel of the amplifier module if the STATUS display mode has been enabled.

Note the following point when working with limit values:

- The measurement signal must be present for at least 1ms. The measuring voltage returned by the amplifier is compared internally with the reference voltage. If the measuring voltage reaches or exceeds the set reference voltage, the relevant logic output switches and the corresponding LED indicates the switching status.

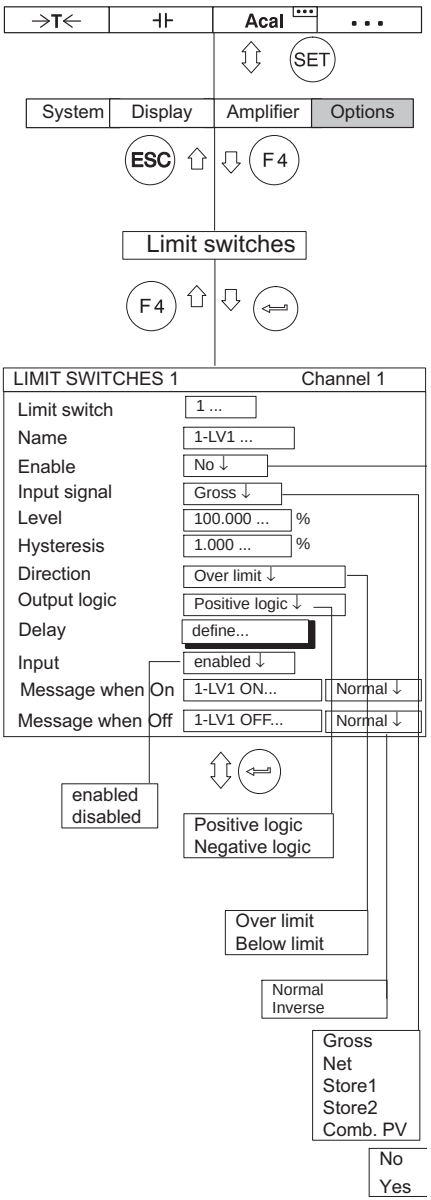

8.2.1 Turning on limit switches

The limit switches are not enabled in the factory settings (Enable "Off").

1. Use the Switch key (SET) to switch to Setup mode.
2. Press (F4)
3. In the pop-up menu select **Limit switches** and confirm with (↵).
4. In the **Enable** selection field select **Yes** and confirm with (↵).

Important

The image type "Status limit switch" is set for the status display of limit values under image no.5 (➔ see also section 9.1.4 "Status limit switch" ; page 224). The limit values must be previously enabled (➔ see section 8.2.2 "Adjusting limit values"; page 190).

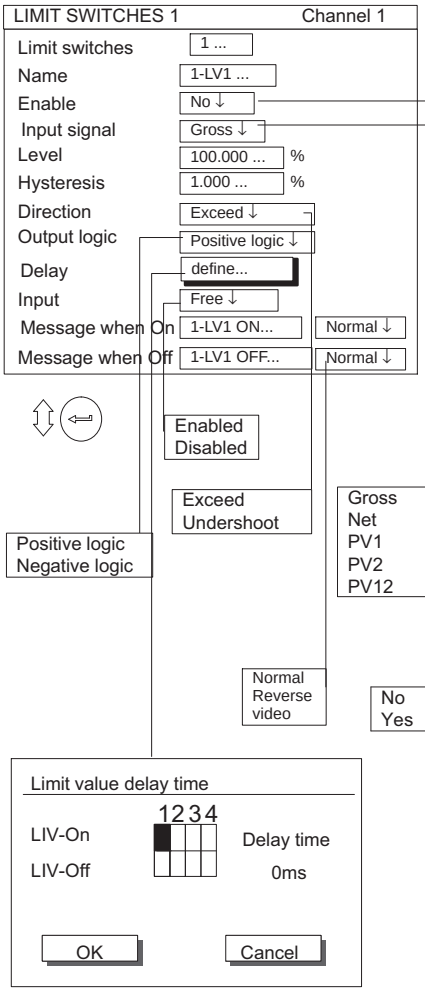

8.2.2 Adjusting limit values

Setup window for limit switches

Adjusting and turning on limit switches (Enable)

Limit switches

You can enter the number (1...4) and confirm with ⏎ to go to the desired setting area. This will save you the effort of running through all the edit fields or selection fields with the cursor keys.

Name

Choose a Name of the limit switch or its function (for example "Emergency Stop")

Enable

Turn limit value monitoring on or off

Input signal

Select the signal source to be monitored (gross/net/peak values/peak value combination).

Level

Enter the response level in display units (kg, etc.).

Hysteresis

The Hysteresis is the modified onset of the switching effect between the states "On" and "Off". The hysteresis prevents the limit switch from "flickering" when the switching level is reached.

Direction

Enter the switching direction or the working direction of the limit switch.

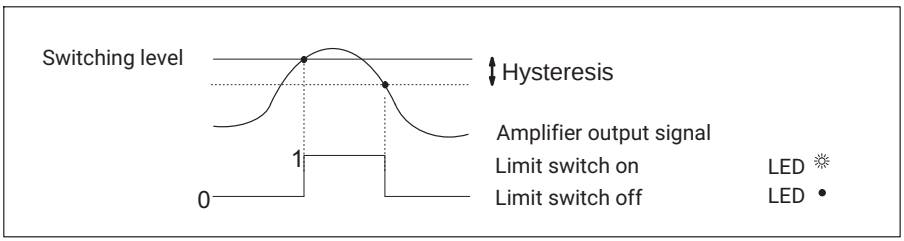

Fig. 8.1 Switch when the switching level is exceeded

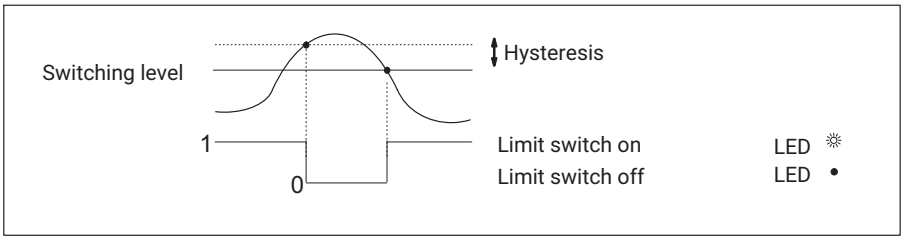

Fig. 8.2 Switch when the switching level is undershot

Limit value delay

You can enter a Limit value delay time of 0 - 99999 ms.

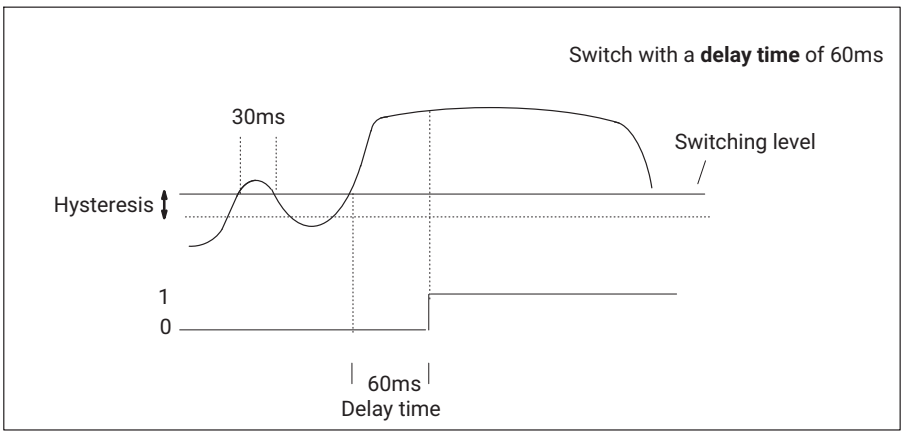

The limit value should only switch if the signal is persistently above the switching level for an extended time (in this case 60ms). The limit switch should not engage if the signal is only present above the switching level briefly (in this case 30ms).

Output logic

You can change the output logic of the remote controls as required.

Positive logic	Negative logic
Turned on =High	Turned on =Low
Turned off =Low	Turned off =High

Input

Enable or disable entry of the limit value level via function keys.

Message when On

Edit field for a message in the display value when switching on (for example "Below 20 kg", ➔ *see also illustration on page 195*). You can also select the type of realization (normal=black print and white background; Reverse video=Light print and dark background).

Message when Off

Edit field for a message in the display value when switching off (for example "Below 20 kg"). You can also select the type of realization (normal=black print and white background; Reverse video=Light print and dark background).

8.2.3 Selection keys in the *Limit switches menu*

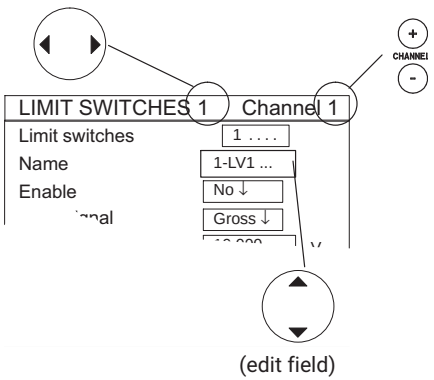

(edit field)

Information

Using the horizontal cursor keys for a function enable is more efficient, for example. As soon as you are in the selection field (edit field) you want (in this case Enable) and you have made your setting with ⇦, press ⇨ . Then you will remain in the selection field (edit field) you want, but you will move to the next limit switch.

8.3 Limit value combination (single-channel modules only)

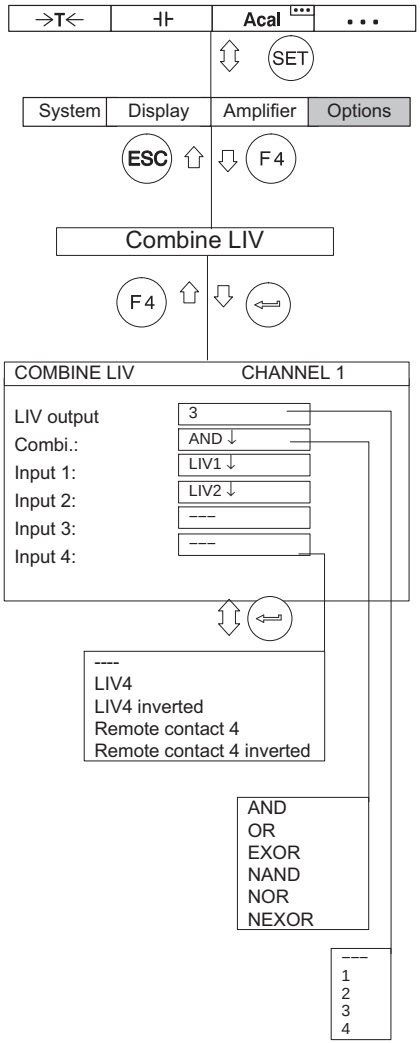

You can use this function to logically combine selected limit switches with a limit value output.

limit value output

Entry for the desired limit value output (---, 1, 2, 3, 4).

Combination

A logical operation on input signals (AND, OR, EXOR, NAND, NOR, NEXOR).

Input signal 1...4

Select the inputs (LV1...LV4 or control input) to be combined.

Limit switch 1	Channel 1		
Limit switch	1		
Name	1–LV1		
Enable	Yes ↓		
Input signal	Gross ↓		
Level	10.000 ...	kN	
Hysteresis	0.010 ...	kN	
Direction	Exceed ↓		
Output logic	Positive logic ↓		
Delay	define...		
Input	Free ↓		
Message when On	Over 10kN...		Normal ↓
Message when Off	Below 10kN...		Reverse video ↓

Limit switch 2	Channel 1		
Limit switch	2...		
Name	1-LV2 ...		
Enable	Yes ↓		
Input signal	Gross ↓		
Level	20.000...	kN	
Hysteresis	0.010 ...	kN	
Direction	Undershoot ↓		
Output logic	Negative logic ↓		
Delay	define...		
Input	Free ↓		
Message when On	Below 20kN ...		Normal ↓
Message when Off	Over 20kN...		Reverse video ↓

Limit switch 3	Channel 1		
Limit switch	3		
Name	1–LV3		
Enable	Yes ↓		
Input signal	Gross ↓		
Level	0.000 ...	kN	
Hysteresis	0.010 ...	kN	
Direction	Exceed ↓		
Output logic	Positive logic ↓		
Delay	define...		
Input	Free ↓		
Message when On	IO		Normal ↓
Message when Off	NOK		Reverse video ↓

Example

Task: The range between 10 kN and 20 kN will be monitored and assessed as "OK". The assessment will be represented in the display by "OK" or "NOK".

Solution: Limit switch 1 monitors the 10kN limit, limit switch 2 monitors the 20 kN limit. The two are combined together with "AND". The result of the combination controls the output of limit switch 3.

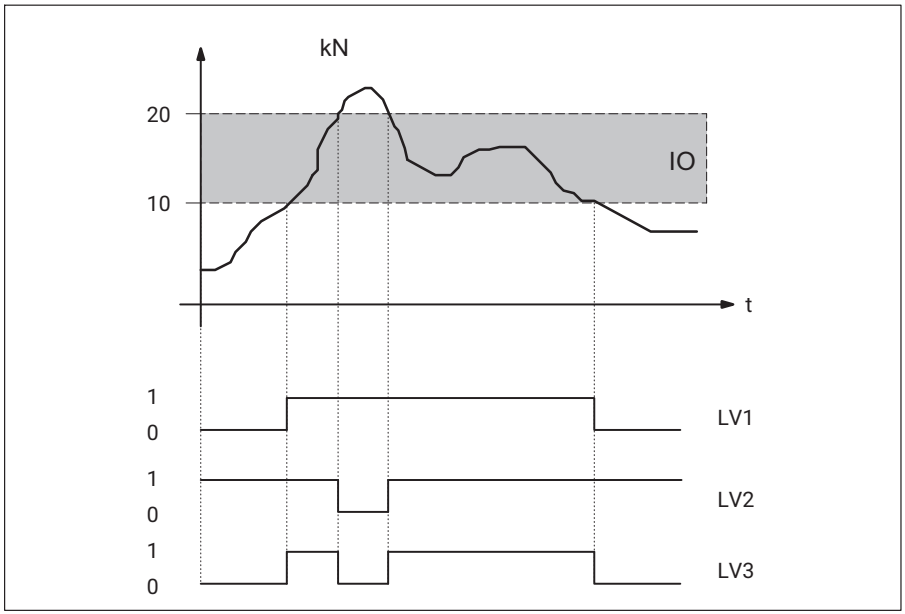

COMBINE LIV	CHANNEL 1
LIV output	3
Combi.:	AND ↓
Input 1:	LIV1 ↓
Input 2:	LIV2 ↓
Input 3:	---
Input 4:	---

With the settings in this example, the following display is produced when limit value 1 is undershot (image type "2 Status limit switch"):

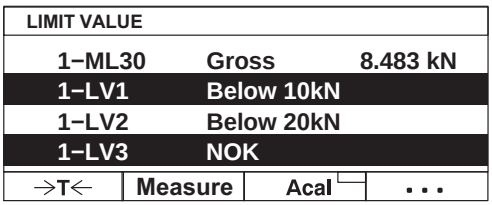

8.4 Set peak values

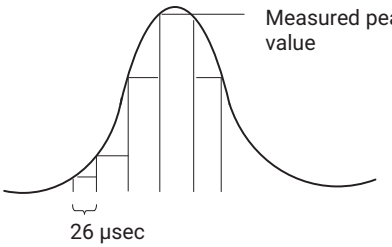

8.4.1 Peak-value memory

The "Peak values" function can be used to record and save isolated signal peaks and minimum/maximum signal amplitudes. Each amplifier contains two peak-value memories.

You can use these to save:

- Maxima
- Minima or
- Peak-to-peak amplitudes

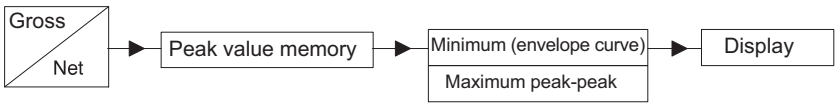

With fast dynamic signals, you must take into account that the peak values are determined in a fixed time grid. The grid is sampled at set filter frequencies > 5 Hz Bessel 10 Hz Butterworth 38,400 times per second, equivalent to 26 µsec.

Due to the abbreviated notation, the peak-value memories in the setup windows are referred to as PV1 and PV2.

Adjusting peak-value memory

In the **Function** selection fields choose the minimum or maximum signal for which you want to save the peak value.

In the **Envelope curve** selection fields turn on the envelope curve function. Enter the time constant in milliseconds in the right edit field.

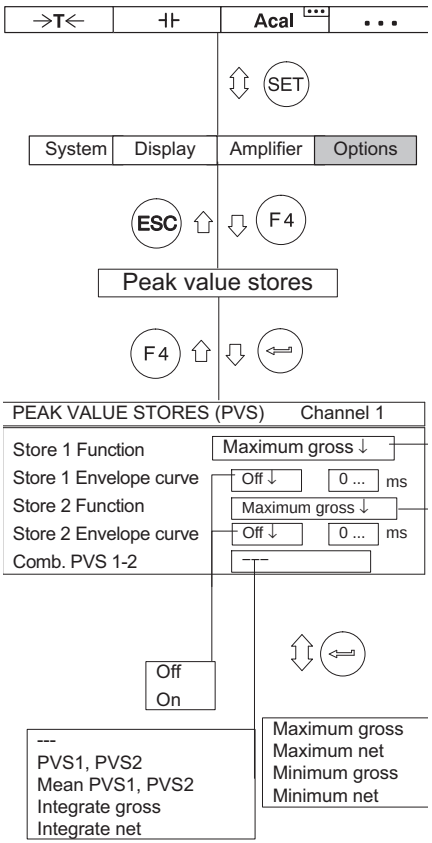

8.4.2 Combining peak-value memories

Combining peak-value memories

Subtraction

PV1 - PV2 (used as peak-to-peak).

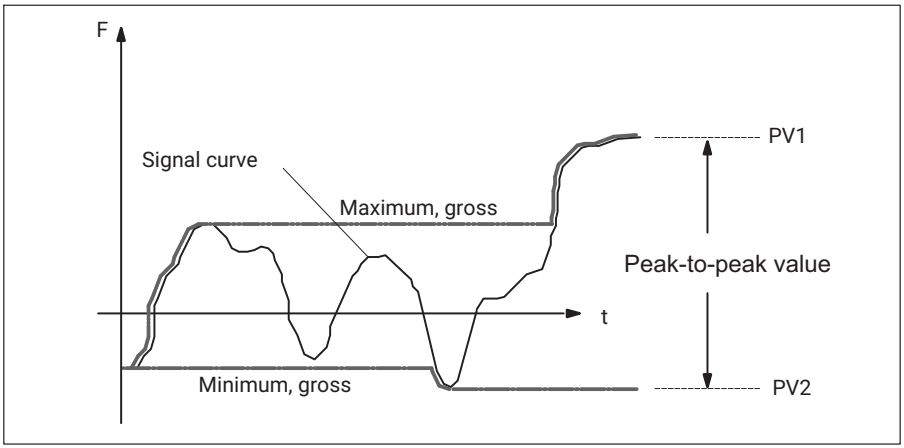

Fig. 8.3 Combining peak values with subtraction

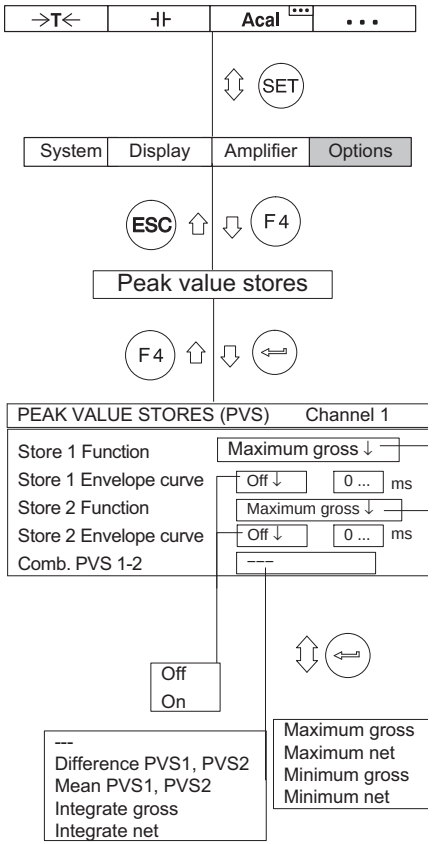

Mean-value calculation

$$\frac{(PV1 + PV2)}{2}$$

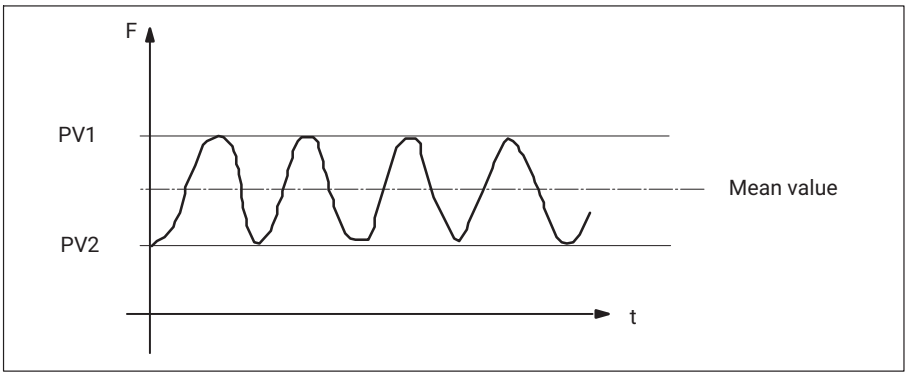

Fig. 8.4 Combining peak values with mean value calculation

Integrate gross

$\sum G/n$ g = Gross signal
n = number of points

Integrate net

$\sum N/n$ N = Net signal
n = number of points

The mean value of the gross/net signal is calculated over a freely selectable time interval. The values are totalized at a sampling rate of 1200 Hz (for filter frequencies >5 Hz: Bessel; >10 Hz: Butterworth).

The beginning/end of integration can be set by assigning an F-key ("Start/Stop integration function"; ➔ *see page 228*) or with a remote control contact (INT).

8.4.3 Control of peak-value memory

Three remote control contacts affect peak-value memory:

CPV: is used to clear peak-value memory

HLD: freezes the current value of memory or releases it again

INT: starts and stops integration over a certain time interval

You can implement other functions with these remote control elements, for example instantaneous value memory.

8.4.4 "Peak value" operating mode

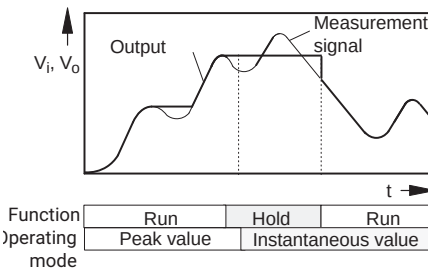

In the **Peak value** operating mode you can save the minimum value, the maximum value or the peak-to-peak value (**Run** function). Use the **Hold** function to hold the contents of memory.

For all connection boards

Function	Control circuit CPV Peak/instantaneous value	Control circuit HLD Run/Hold
Peak value: Memory also runs in the selected direction	5V	5V
Freeze value	Any	**0V**

8.4.5 "Instantaneous value" operating mode

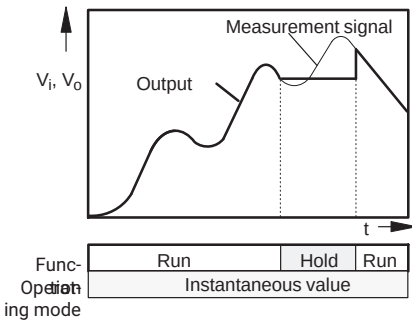

In **Instantaneous value** operating mode memory is continuously updated (**Run** function). Use the "Hold" function to hold the contents of the store. You can switch peak-value memory to the **Instantaneous value** operating mode with the remote control contacts.

For all connection boards

Function	Control circuit Peak/instantaneous value	Control circuit Run/Hold
Instantaneous value: Memory also runs in each direction	**0V**	5V
Freeze value	Any	**0V**

8.4.6 Envelope curve operating mode

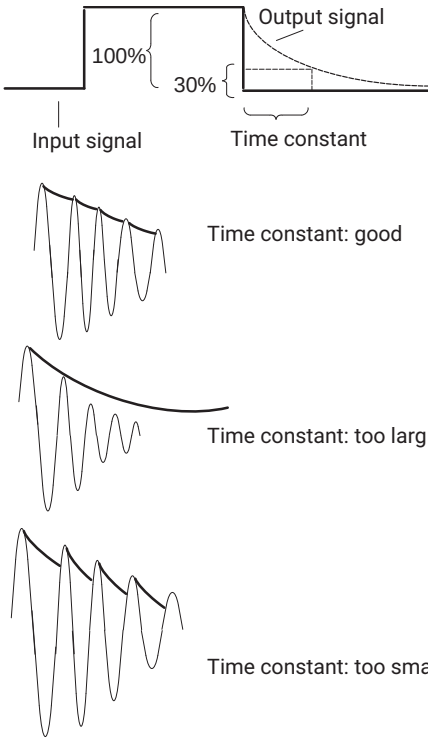

Peak-value memories can also be used to realize an envelope curve. The envelope function is suitable for measuring amplitude-modulated vibration. Entering a time constant determines how quickly peak-value memory will discharge to 30% of the peak value again when the peak value is no longer present at memory input. The selection of a time constant depends on the fundamental oscillation frequency f_0 and the modulation frequency. Usable envelope curves can generally be obtained with a time constant of around 10 times the period of the fundamental frequency ($t= 10/f_0$).

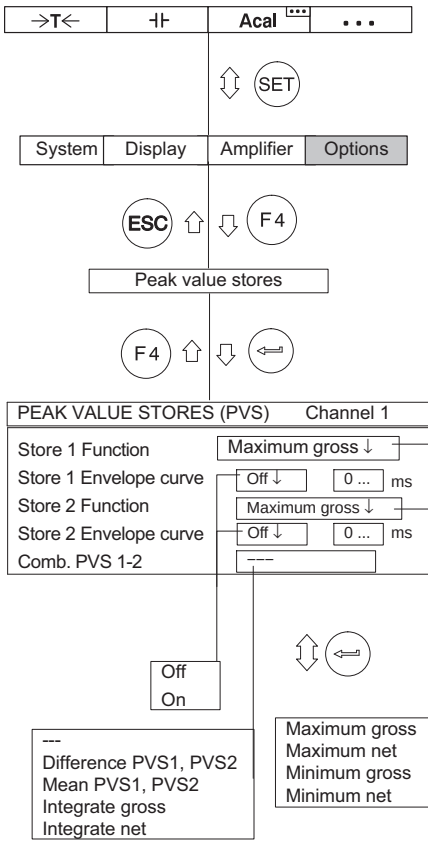

8.4.7 Clear peak-value memory

Due to the abbreviated notation, the peak-value memories in the setup windows are referred to as PV1 and PV2.

Clear peak-value memory

There are three ways to clear the peak-value memory:

1. With a function key (factory settings F3/Level 3).
2. Use the remote control contacts CPV1/CPV2 (in pull-up menu **Amplifier**, Setup window **Switch** to set selection field **Remote control ON**).
3. Via a computer using the **CPV** computer.

8.5 Version

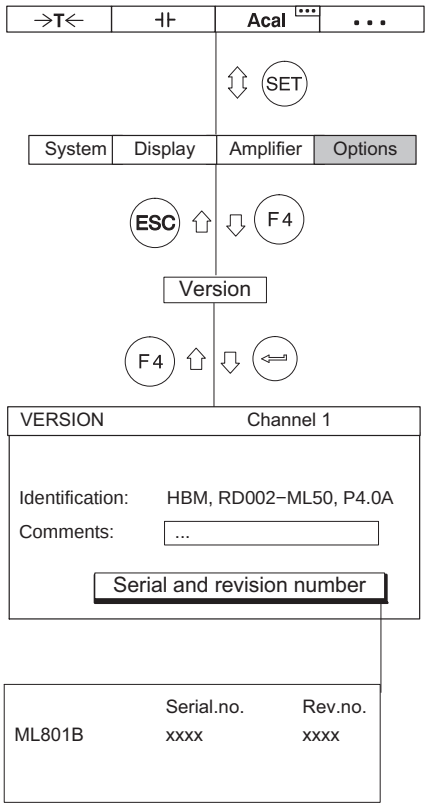

You can use the channel selection keys to show information about the version of your device components one after the other. The name of the device component (AB, CP, channel1, etc.) whose version will be displayed appears at the right of the header. In the field underneath, the first line shows details on device identification while the second line is available for user comments.

The **Serial/revision number** button is used to open a new information window.

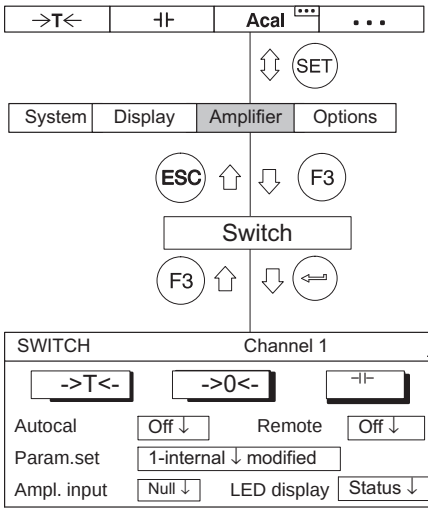

8.6 Switching

The **Switching** setup window contains first of all three buttons you can use to

->T<- Tare

->0<- Perform a zero balance

⊣⊢ Clear peak-value memory.

In the selection fields underneath you can switch the possible states of functions **Autocalibrate**, **Parameter set**, **Amplifier input**, **Remote control** and **LED display**.

Autocal

Switches automatic autocalibration on and off. You can use **AUTOCAL On** to improve the temperature response of the zero point and the long-term consistency of the amplifiers. If you need the analog output signal for continuous monitoring, you must turn off autocalibration. This is because no measured values are acquired during calibration. Therefore there is a "gap" (lasting for approximately 1 second at intervals of about 5 minutes, depending on the filter setting) in the output of measured values.

Parameter set

Selection of saved parameter sets (➔ *see also page 237*).

Ampl. input

Null:	Zero signal; input internally at zero potential
Cal:	Calibration signal
Measure:	The current measurement signal is present at the input
Shunt:	Shunt resistor turned on (shunt calibration)

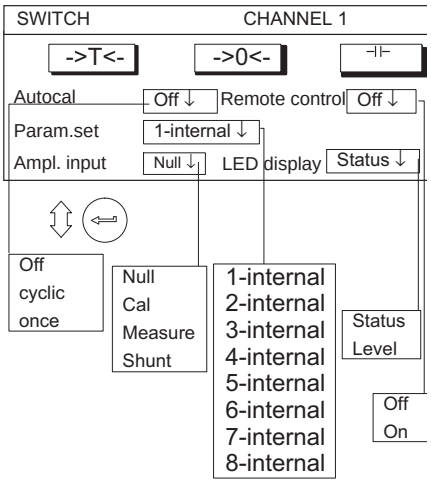

Remote control

Turning remote control on/off (activates remote control contacts)

LED display

Switches the function of the LEDs on the front panel of the amplifier.

Status
Status display (amplifier active, error, limit values)

Level
Degree of control exerted by the amplifier

9 DISPLAY

one value

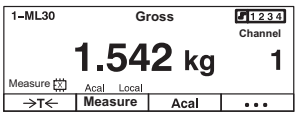

3 values

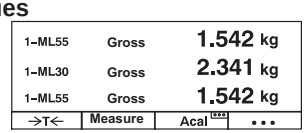

6 values

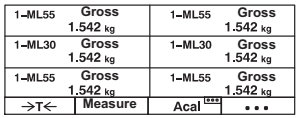

YT-Diagram

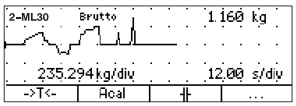

XY-Diagram

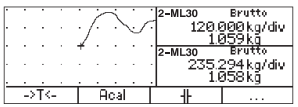

Status limit switch

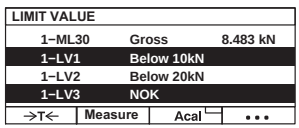

Data acquisition

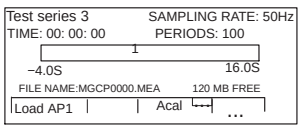

9.1 Display format

The settings affect how the selectable signals in the display are realized. Normally you can select four different signals (gross, net, limit values and peak values) for each channel.

The measured values can be realized as numeric values or as a graph. A maximum of six measured values can appear at the same time in the numeric value realization.

The display states shown on the left, referred to as *Image types*, can be selected in the setting menu.

Realization as numeric value

- one value (with/without status line)
- 3 values
- 6 values

Realization as a graph

- YT-Diagram
- XY-Diagram

Display of four limit value states

- Status limit switch

Display with image type “Data acquisition"

- Pre-trigger status
- Post-trigger status

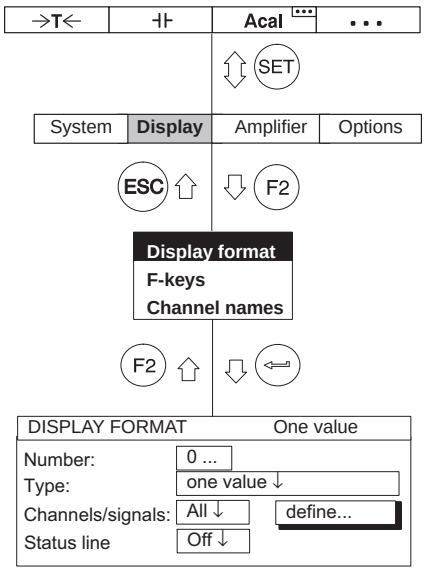

9.1.1 Select setup window

1. Use the Switch key (SET) to switch to Setup mode.
2. Press (F2).
3. In the pull-up menu select **Display format** and confirm with (↵).

You will then be in the **Display format** setup window.

9.1.2 Setup window *Display format*

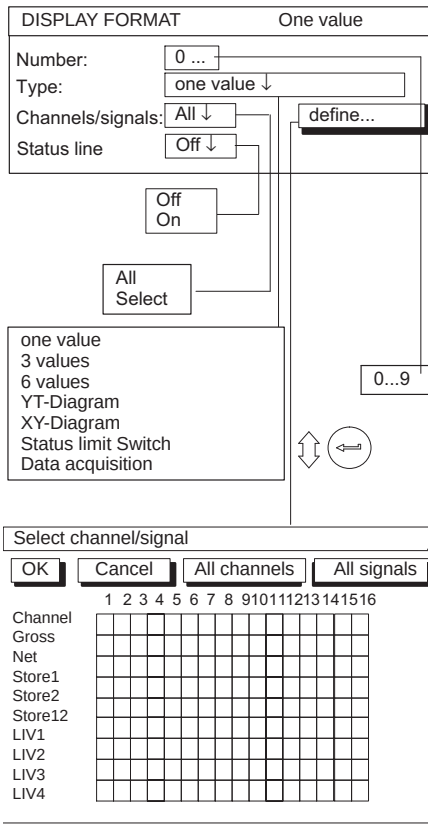

The layout of the **Display format** setup window depends on the image type selected. The window mask changes depending on the image type selected. For example the **Status line** selection field is only present with the **one value** image type.

Menu for image type “one value”

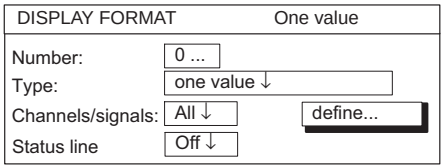

Menu for image type “3 values”

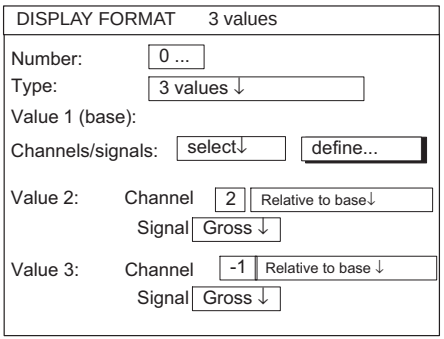

9.1.3 Setup window components

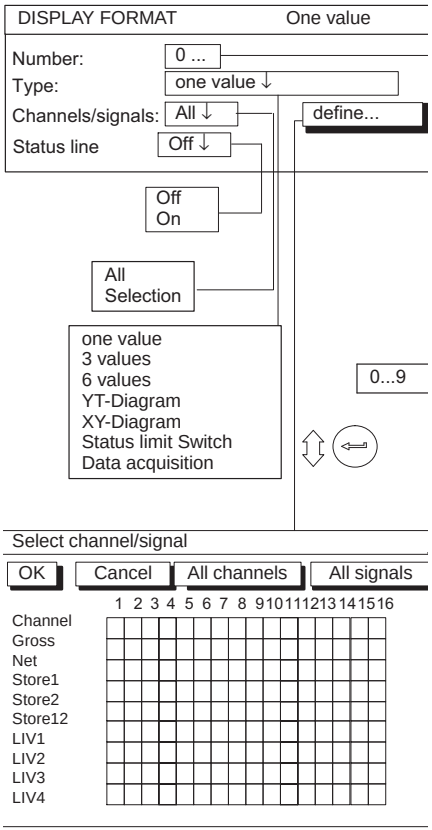

Image no.

You can enter the numbers 1...9 in this edit field. This allows you to save your current display settings as a number or call up factory default settings. You can also define the order in which the image types are selected in measuring mode with the cursor keys .

The following order is defined in the factory setting:

Image no.	Image type	Channels/signals	Status line
0	one value	All	One
1	3 values	All	-
2	6 values	All	-
3	YT-Diagram	All	-
4	XY-Diagram	All	-
5	Status limit switch	-	-
6	Data acquisition	-	-
7	Free	-	-
8	Free	-	-
9	Free	-	-

Image type

With this image type you define the number of measurement signals that can be realized simultaneously (for numeric values only) or the type of realization (graph only). You can also display the status of the four selected limit switches.

9.1.3.1 Numeric value display

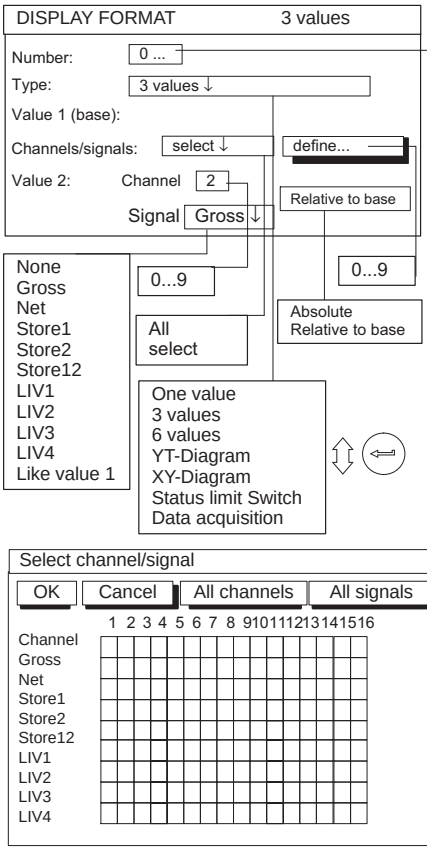

Channels/signals

You can define here which channels will be realized with which signals in the first display line. You can define your settings for all channels or only for certain ones (Selection) (button symbol define...). You can call a maximum of four signals one after the other per channel.

For image types 3/6 measured values, the basic channels are defined here (display value 1).

define...

Button symbol opens new window **Channel/signal selection.**

Status line

The status line can be shown in the display for image type **one value**.

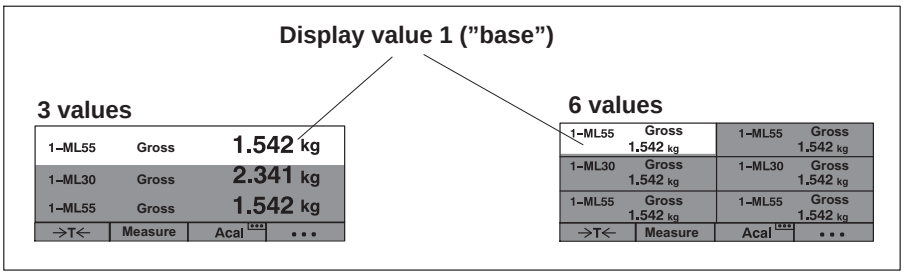

Display value (2...6): Channel

Depending on the selection the value that is entered is **absolute/relative**.

You can use this setting with image types **3 values** and **6 values** to define what reference should be set up to the basic channel.

Absolute/relative to basic value

You can use this setting with image types **3 values** and **6 values** to define whether a reference should be set up to the channel number of the basic channel.

Absolute

The measured value and the signal of the selected channel are displayed independently of the basic value. The number that is entered corresponds to the actual channel number. Switching channels in measuring mode has no effect on this display value.

Relative to basic value

The number entered here refers to the basic channel (display value 1). Channels located to the left of the basic channel are entered with a negative sign, channels to the right with a positive sign.

Important

*This values does **not** correspond to the actual channel number!*

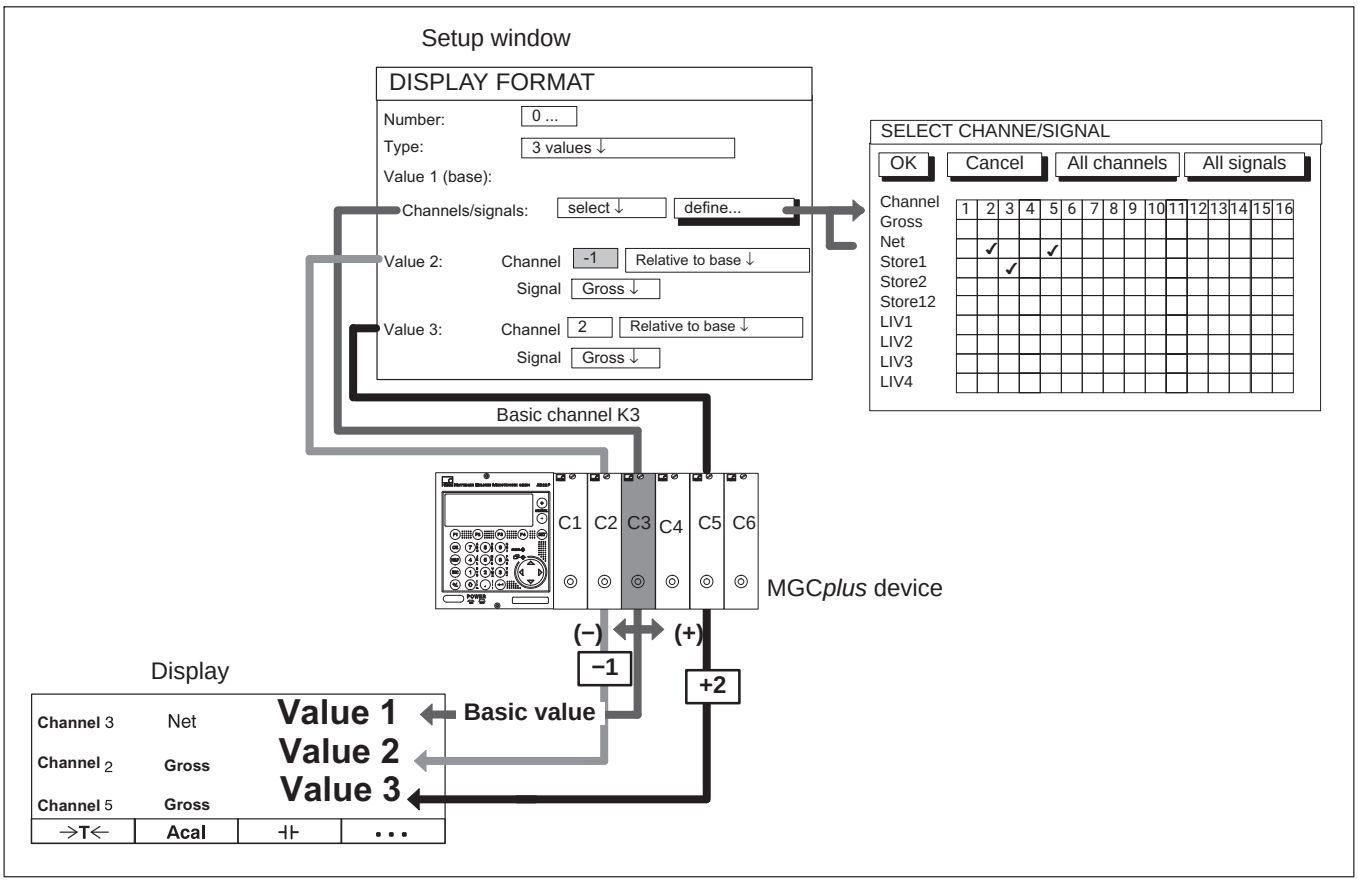
Setup window
DISPLAY FORMAT
Number:
0 ...
Type:
3 values ↓
Value 1 (base):
Channels/signals:
select ↓
define...
Value 2:
Channel
-1
Relative to base ↓
Signal
Gross ↓
Value 3:
Channel
2
Relative to base ↓
Signal
Gross ↓
SELECT CHANNE/SIGNAL
OK
Cancel
All channels
All signals
Channel
Gross
Net
Store1
Store2
Store12
LIV1
LIV2
LIV3
LIV4
1 2 3 4 5 6 7 8 9 10 11 12 13 14 15 16
Basic channel K3
C1 C2 C3 C4 C5 C6
MGCplus device
(–)
(+)
–1
+2
Display
Channel 3 Net
Channel 2 Gross
Channel 5 Gross
Value 1
Value 2
Value 3
Basic value
→T←
Acal

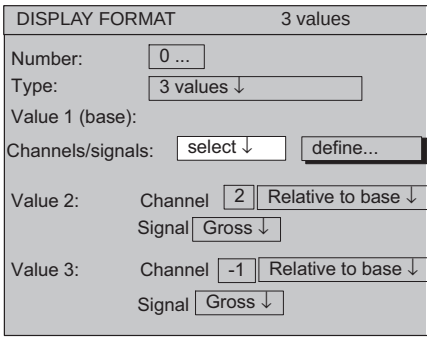

Example1: 6-channel device; image type **3 values**

The setting in the **Channels/signals** setting field and the relative channel number affect the order of the measured values displayed in measuring mode.

Channels/signals: + All

When the channel selection buttons (+ CHANNEL -) are activated, all channels are activated one after the other, starting from the basic channel.

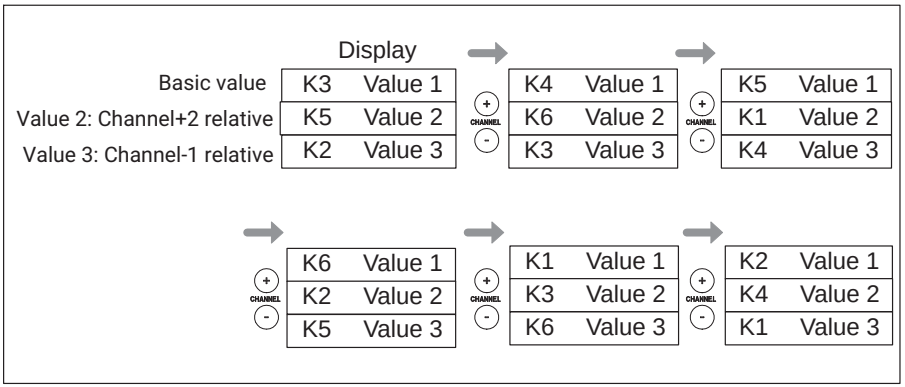

When the cursor keys (SIGNAL) are activated, all signals of the basic channel set in the **Channel/signal selection** menu are displayed.

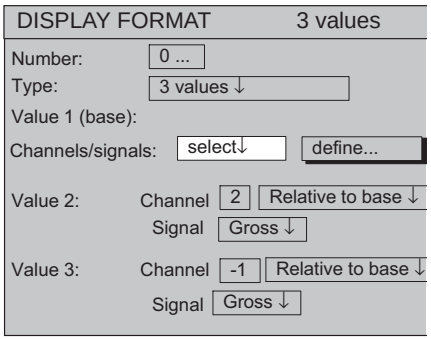

b) Channels/signals: + selection

When the channel selection buttons (+ CHANNEL -) are activated in measuring mode, the selected channels of the basic channel (in this example 1, 3, 5) are activated one after the other. The display fields of channels that are not selected remain empty.

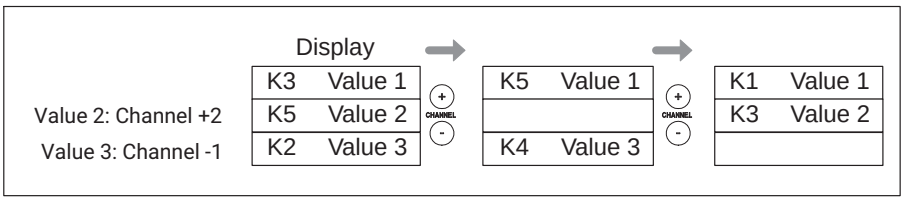

When the cursor keys (SIGNAL) are activated, all signals of the basic channel set in the first display line in the **Channel/signal selection** menu are displayed in measuring mode.

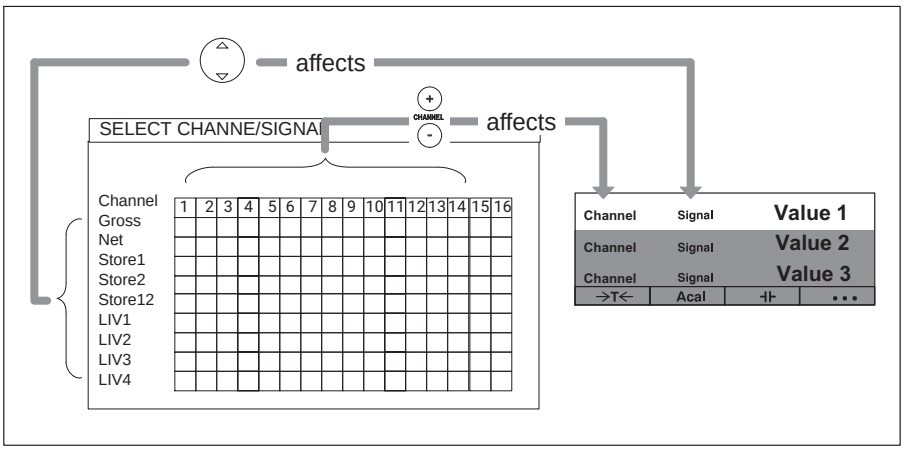

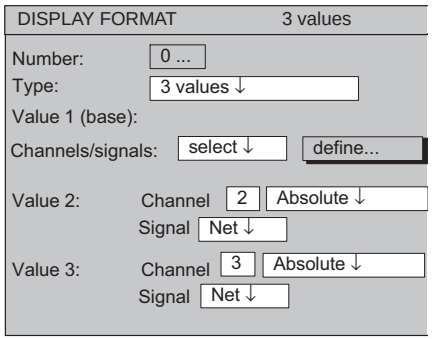

Example2: The net weights of three containers will be displayed simultaneously. The following assignment will apply:

Container 1 → Channel 1
Container 2 → Channel 2
Container 3 → Channel 3

First the channel names are assigned

1. Use the Switch key (SET) to switch to Setup mode.
2. Press (F2).
3. In the pull-up menu select **Channel names** and confirm with (⇦).
4. In edit field **Channel 1** enter ***CONTAINER 1*** and confirm with (⇦).
5. In edit field **Channel 2** enter ***CONTAINER 2*** and confirm with (⇦).
6. In edit field **Channel 3** enter ***CONTAINER 3*** and confirm with (⇦).
7. Press (F2).
8. In the pull-up menu select **Display format** and confirm with (⇦) .
9. Use (⇳) in the **Image type** selection field to select ***3 values*** and confirm with (⇦) .
10. Use (⇳) in the **Channels/signals** selection field to choose ***select*** and confirm with (⇦).
11. Use (⇳) to select the **define...** button symbol and confirm with (⇦) .
12. Use (⇳) to select the **Channel 1/Net** control field and confirm with (⇦) (a ✓ appears in the control field).
13. Use (⇳) to select the **OK** button symbol and confirm with (⇦) .
14. Use (⇳) to select edit field **Value 2:Channel** and enter ***2***.

15. Use ⇕ to select edit field **Absolute/relative**, select **Absolute** and confirm with ↵ .
16. Use ⇕ to select edit field **Signal**, select **Net** and confirm with ↵.
17. Use ⇕ to select edit field **Value 3:Channel** and enter ***3***.
18. Use ⇕ to select edit field **Absolute/relative**, select **Absolute** and confirm with ↵ .
19. Use ⇕ to select edit field **Signal**, select **Net** and confirm with ↵.

To return to measuring mode, press the Switch key SET and confirm the confirmation prompt with ↵.

Example3: Force and displacement will be measured on each of the two presses. The following assignment will apply:

Force - press 1	→	Channel 1
Displacement of press 1	→	Channel 2
Force - press 2	→	Channel 3
Displacement of press 2	→	Channel 4

A display with three measured values will be set up. The same signals will be compared between press 1 and press 2.

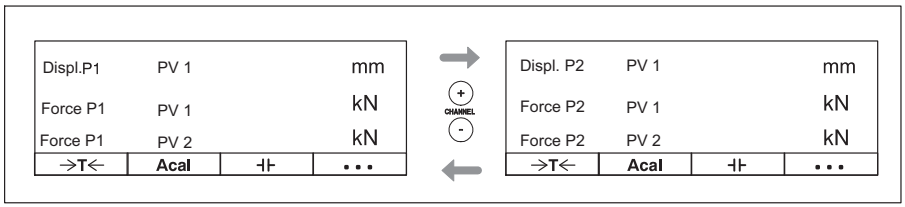

First the channel names are assigned

CHANNEL NAMES	
Channel 1:	Force P1
Channel 2:	Displacement P1
Channel 3:	Force P1
Channel 4:	Displacement P2
Channel 5:	
Channel 6:	

1. Use the Switch key (SET) to switch to Setup mode.
2. Press (F2).
3. In the pull-up menu select **Channel names** and confirm with (⇦).
4. In edit field **Channel 1** enter ***FORCE P1*** and confirm with (⇦).
5. In edit field **Channel 2** enter ***DISPLACEMENT P1*** and confirm with (⇦).
6. In edit field **Channel 3** enter ***FORCE P2*** and confirm with (⇦).

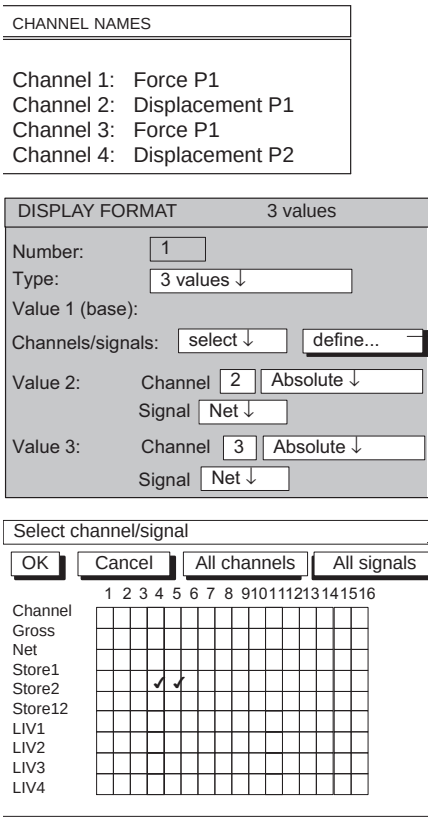

7. In edit field **Channel 4** enter ***DISPLACEMENT P2*** and confirm with (⇦).
8. Press (F2).
9. In the pull-up menu select **Display format** and confirm with (⇦).
10. In edit field **Image no.** enter ***1*** and confirm with (⇦).
11. Use (⇳) in the **Image type** selection field to select ***3 values*** and confirm with (⇦).
12. Use (⇳) in the **Display value 1: Channels/signals** selection field to choose ***SELECTION*** and confirm with (⇦).
13. Use (⇳) to select the **define...** button symbol and confirm with (⇦).
14. Use (⇳) to select the **Channel 2/PV1** control field and confirm with (⇦) (a ✓ appears in the control field).
15. Use (⇳) to select the **Channel 4/PV1** control field and confirm with (⇦) (a ✓ appears in the control field).
16. Use (⇳) to select the **OK** button symbol and confirm with (⇦) .
17. In edit field **Value 2: Channel** enter ***-1*** and confirm with (⇦).

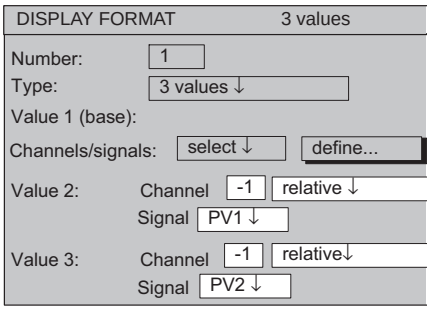

18. Use ⇳ in the **Absolute/relative** selection field to select ***Relative*** and confirm with ⏎.
19. Use ⇳ in the **Signal** selection field to select ***PV1*** and confirm with ⏎.
20. In edit field **Value 3: Channel** enter ***-1*** and confirm with ⏎.
21. Use ⇳ in the **Absolute/relative** selection field to choose ***Relative*** and confirm with ⏎.
22. Use ⇳ in the **Signal** selection field to select ***PV2*** and confirm with ⏎.
23. Press the Switch key SET and confirm the confirmation prompt with ⏎.

9.1.3.2 Graphic display

Image type y-t realization

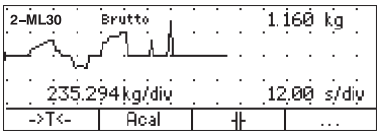

Setup window

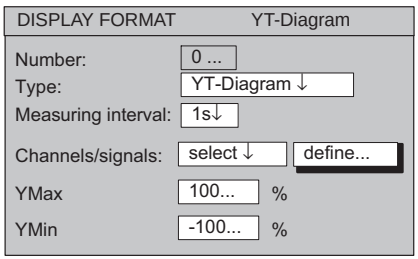

Setup window

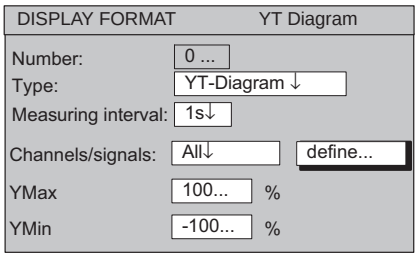

y-t realization

This realization allows you to consider the progression of measured values over time.

Sampling rate

Time interval of signal sampling.

Channels/signals

You can define here which channels will be realized with which signals in the display. You can define your settings for all channels or only for certain ones (Selection) (button symbol define...). You can call a maximum of four signals one after the other per channel.

define...

Button symbol opens new window **Channel/signal selection.**

y_{max}

Maximum value of the display relative to the current measuring range (as a %).

y_{min}

Minimum value of the display relative to the current measuring range (as a %).

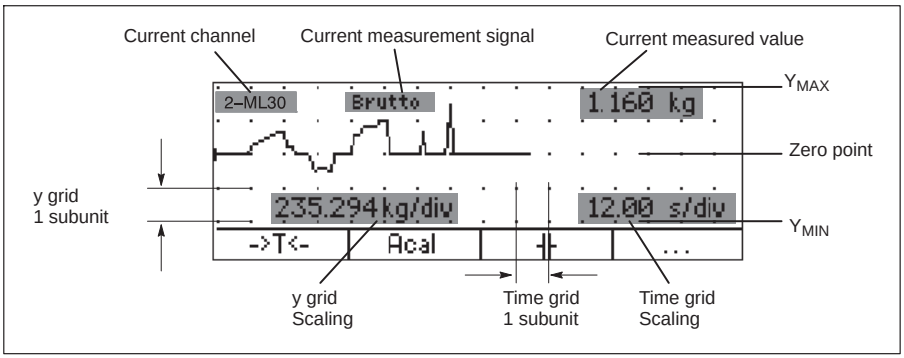

Image type xy realization

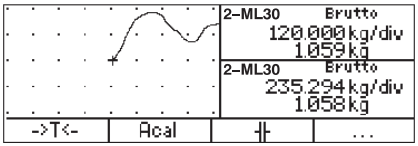

Setting menu

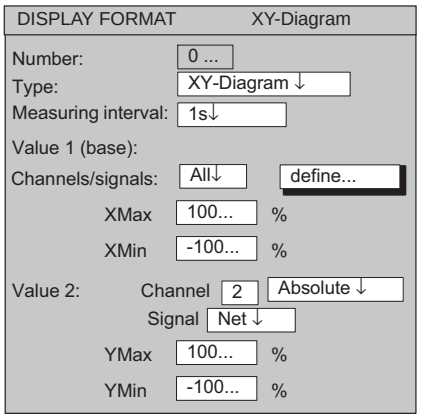

x-y realization

Sampling rate

Time interval of signal sampling.

Channels/signals

You can define here which channels will be realized with which signals in the display. You can define your settings for all channels or only for certain ones (Selection) (button symbol define...). You can call a maximum of four signals one after the other per channel.

define...

Button symbol opens new window **Channel/signal selection**.

Setting menu

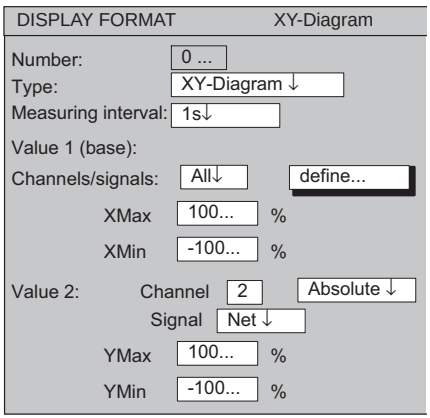

y_{max}

Maximum value of the vertical axis relative to the current measuring range (%).

y_{min}

Minimum value of the vertical axis relative to the current measuring range (%).

x_{max}

Maximum value of the horizontal axis relative to the current measuring range (%).

x_{min}

Minimum value of the horizontal axis relative to the current measuring range (%).

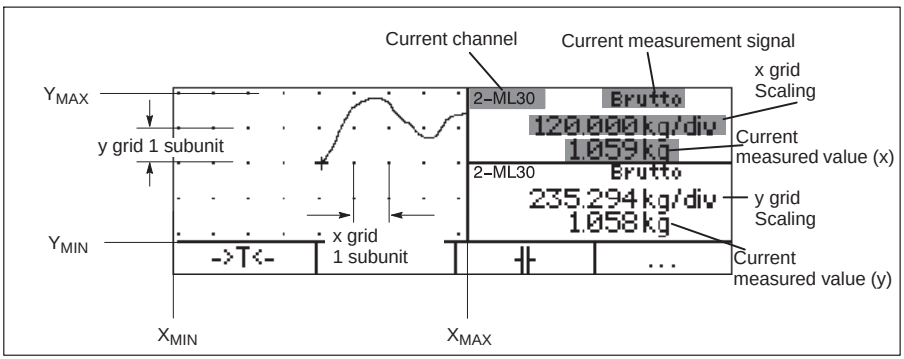

Image type: Status limit switch

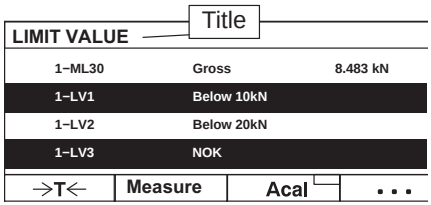

Setup window

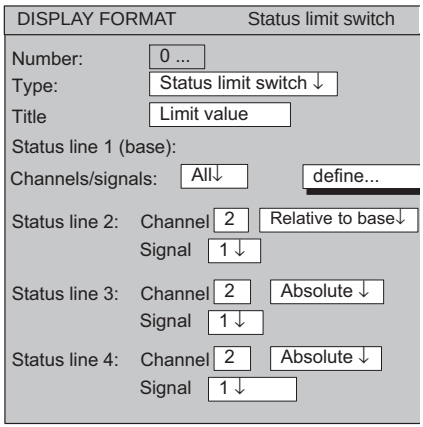

9.1.4 Status limit switch

Title

Any user-specific name; appears in the header (factory setting "limit value").

Display value 1 (base): Channel

You can define here which channels will be displayed with which signals in the first status line. You can define your settings for all channels or only for certain ones (Selection) (button symbol define...). You can call a maximum of four signals one after the other per channel.

define...

Button symbol opens new menu **Channel/signal selection**.

Absolute/relative to base

You can use this setting to determine whether a reference to the basic channel should be set up.

Absolute

The measured value and the signal of the selected channel are displayed independently of the basic value. The number that is entered corresponds to the actual channel number. Switching channels has no effect.

Relative to base

The number entered here refers to the basic channel. The basic channel number is 0. Channels located to the left of the basic channel are entered with a negative sign, channels to the right with a positive sign.

Important

This values does not correspond to the actual channel number

Information

Enter the designation of the limit values in the **Options** ⇨ **Limit switch** *menu.*

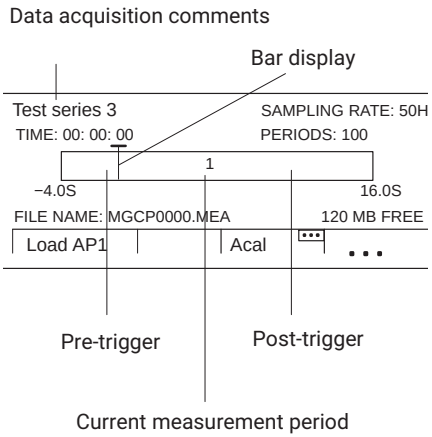

9.1.5 Data acquisition

Bar display

This realization shows the current status of the data acquisition.

Data acquisition comments

User-specific comment (for example the test series number).

Sampling rate

The current sampling rate for all defined channels is shown here.

Measurement time

Time elapsed since the beginning of the measurement period.

Periods

Number of measurement periods

File name

Name of the saved recording file. The file will not be overwritten when the measurement program is restarted. Instead the counter (last four places) will be incremented.

xxx MB free

Indicates the free storage space on the hard disk.

Information

The MGCplus computer detects when the storage capacity of the hard disk falls below 1 MB. In this case recording is canceled and the measurement file is closed.

9.2 F keys

F keys level 1

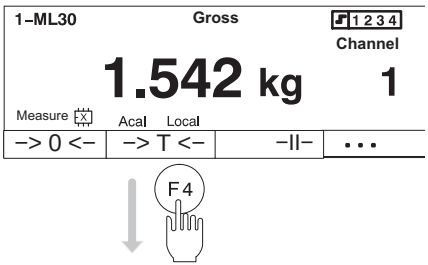

F keys level 2

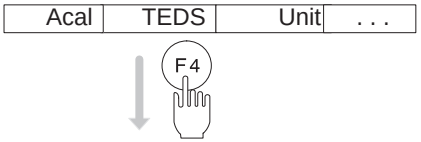

F keys level 3

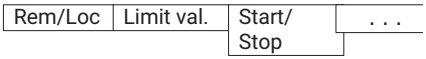

F keypad

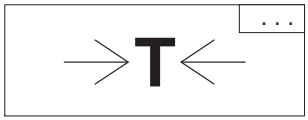

9.2.1 F keys in measuring mode

Function keys F1...F4 are active both in measuring mode and in Setup mode.

You can switch a total of 9 functions on three levels in measuring mode:

Level 1

- F1 Zero balance
- F2 Tare
- F3 Delete peak-value memory

Level 2

- F1 Autocalibration
- F2 TEDS (read transducer data)
- F3 Switch unit (➔ *see also page 125*)

Level 3

- F1 Remote control on/off
- F2 limit value level
- F3 Start/Stop

The keys can be freely assigned by the user. The assignment given above corresponds to the factory settings. In the factory settings the F4 key switches to the next level (...F level).

You can extend the effect of the functions to all channels or limit it to one channel (the one selected).

The current key assignment appears in the bottom line of the display in measuring mode for all image types. If you have determined the function for all the channels, this is indicated by the [. . .] symbol in top right corner of the F keypad.

Function	Effect
Tare	Taring is triggered.
Zero balance	A zero balance is being performed.
Delete memory	Peak-value memory is deleted.
Zero/Cal/Measure	Switching between zero signal, calibration signal and measurement signal.
Autocal	Autocalibration is turned on/off.
LED Status/Level	Switching between LED display "Status" and "Level".
Limit value level	The "Limit value level" menu is called.
Remote/Local	Turn remote control on/off.
Shunt On/Off	Turn shunt (transducer, AP14) on/off.
Start/Stop display	The current measured value in the display is "frozen" (pause function).
Load next P-set	The next parameter set of the amplifier(s) is loaded (1...8).
Load previous P-set	The previous parameter set of the amplifier(s) is loaded (1...8).
Switch unit	Switches between the basic unit (mV/V), user unit (for example kg) and analog output (V).
Start/Stop integration	Integration of peak values is turned on/off.
Start/Stop data acquis.	Data acquisition of measured values is turned on/off.
Load DAQ param. set	Parameter sets are loaded from RAM (parameter set 0) or the hard disk parameter sets 1...16).
Load DAQ comments	Data acquisition comments are loaded from the hard disk.
Linearization On/Off	Turn linearization of the characteristic curve of the transducer on/off.
TEDS	The transducer data is read into the amplifier

Tab. 9.1 Assignment abbreviations of the function keys

Setup window

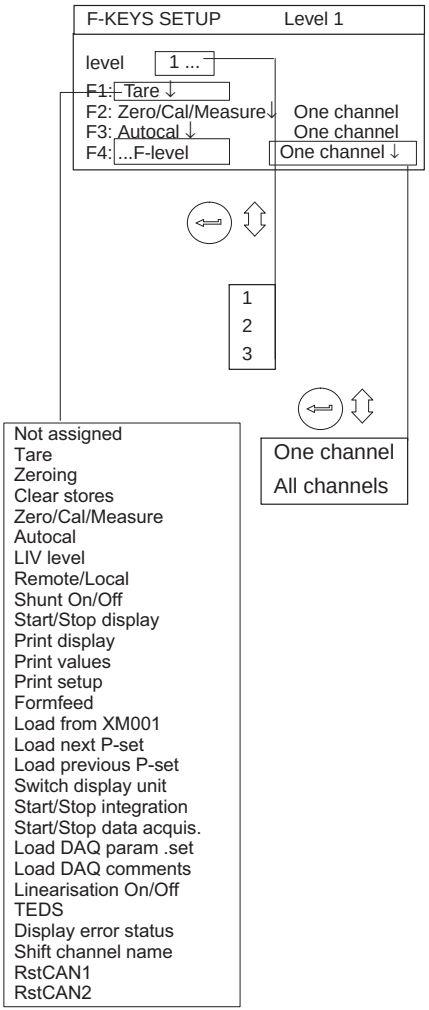

Select setup window

1. Use the Switch key (SET) to switch to Setup mode.
2. Press (F2) .
3. In the pop-up menu select **F keys** and confirm with (⇦).

You will then be in the **F keys** setup window.

9.2.2 F keys in Setup mode

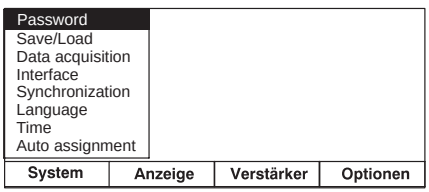

In setup mode, use the function keys to open the pull-up menus belonging to the menu bar.

9.3 Channel names

Setup window

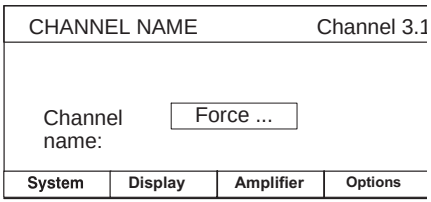

Select setup window

1. Use the Switch key (SET) to switch to Setup mode.
2. Press (F2).
3. In the pull-up menu select **Channel names** and confirm with (↵).

All channels present in the setup window have the channel names assigned in the factory at first.

Empty edit fields identify free slots in your device.

Information

If you want to rewrite an edit field that is already written, use the delete key to (C E) delete the entire entry.

10 SYSTEM

10.1 Password

You can protect all the settings of your device with a password. This password protection is turned off in the factory settings. As soon as the password protection is activated, the password must be entered every time Setup mode is called (and every time the device is turned on again). Only then can the settings be edited. The password does not need to be entered for measuring mode alone.

Access authorization is connected with the password:

- System (all settings can be changed)
- Operator (only enabled settings can be changed)

You can define a password and access authorization for a maximum of nine users.

Important

In the factory settings, password protection cannot be turned on until a new user has been defined with "System" access authorization.

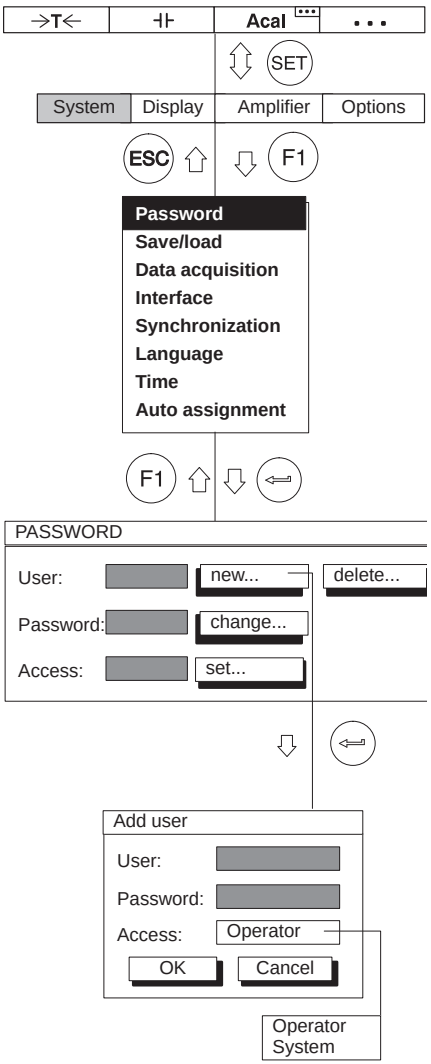

10.1.1 Define new user

1. Use the Switch key (SET) to switch to Setup mode
2. Press (F1) .
3. In the pull-up menu select **Password** and confirm with (↵) .
4. Use (↕) to select the **new...** button symbol and confirm with (↵) .
5. In the **User** edit field, enter the new user name and confirm with (↵).
6. Use (↕) to select the **Password** edit field, enter your password and confirm with (↵).
7. Use (↕) to select the **Access** selection field, choose the desired access authorization and confirm with (↵).
8. Use (↕) to select the **OK** button symbol and confirm with (↵).

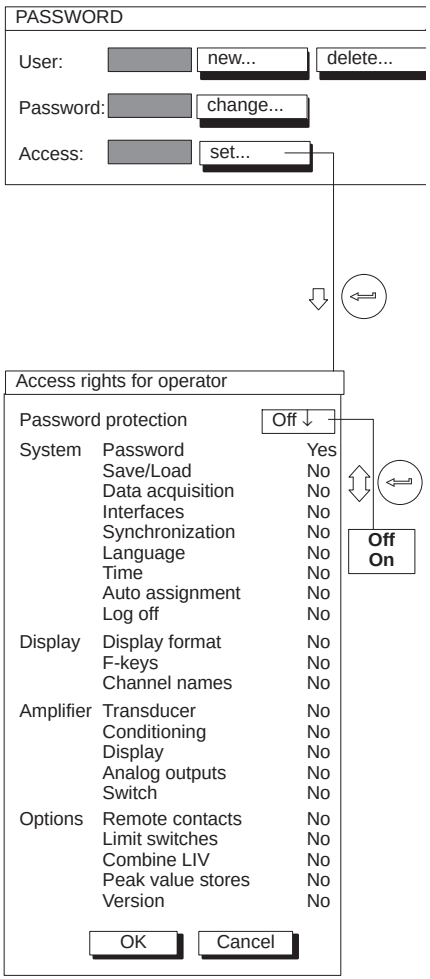

10.1.2 Password protection activation

If you are still in the **Password** setup window, continue with item 4.

1. Use the Switch key (SET) to switch to Setup mode.
2. Press (F1) .
3. In the pull-up menu select **Password** and confirm with (⇦) .
4. Use (⇳) to select the **set...** button symbol and confirm with (⇦) .
5. Press (⇦).
6. Use (⇳) to select the **Password protection** On selection field and confirm with (⇦).

If the error message **No user with system rights present** appears, first press the Cancel key (ESC) to delete the error message. Use (⇳) to select Off and press (ESC) again. Press (ESC) twice. You will then be in the **PASSWORD** setup window. Now define a user with system authorization as described in
➔ *section 10.1.1, page 232*.

7. Press (ESC) (so you will go immediately to the OK key) and confirm with (⇦).

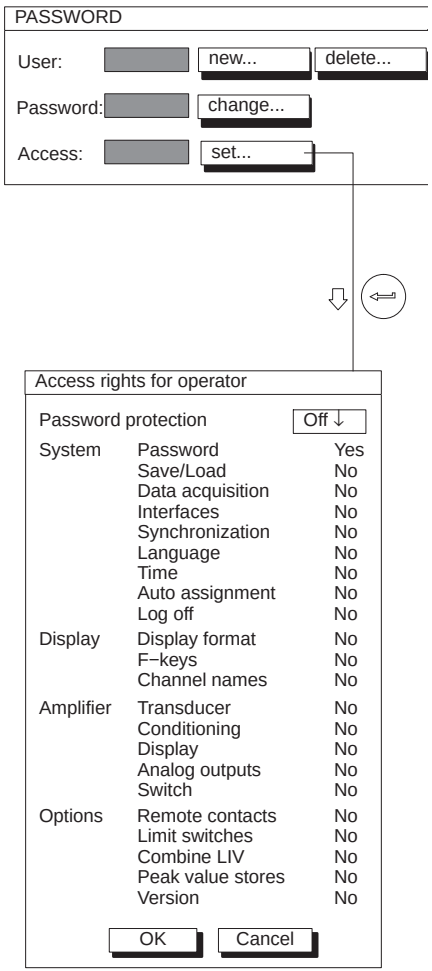

10.1.3 Set access for operator

If you are still in the **Password** setup window, continue with item 4.

1. Use the Switch key (SET) to switch to Setup mode
2. Press (F1) .
3. In the pull-up menu select **Password** and confirm with (⏎) .
4. Use (▲▼) to select the **set...** button symbol and confirm with (⏎).
5. Use (▲▼) to choose the desired **No/Yes** selection field and confirm with (⏎).
6. Use (▲▼) to select the desired setting and confirm with (⏎).
7. Press (ESC) (so you will go immediately to the OK key) and confirm with (⏎).

To return to measuring mode, press the Switch key (SET) and confirm the confirmation prompt with (⏎).

10.1.4 Delete user

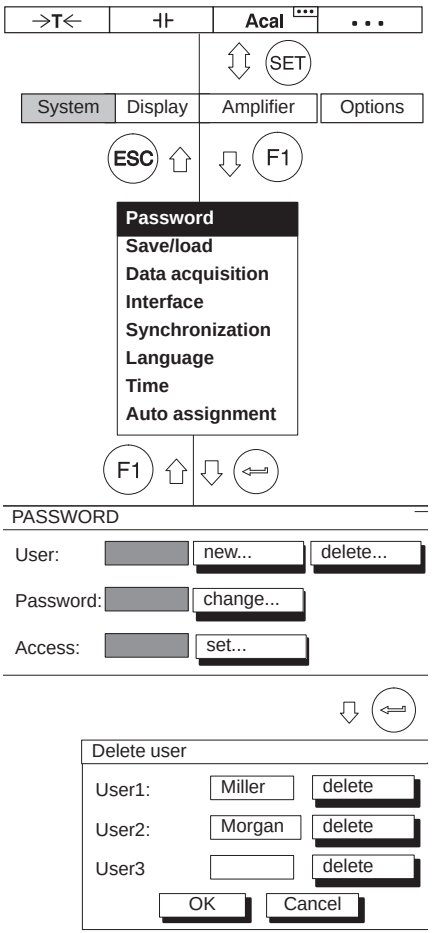

If you are still in the **Password** setup window, continue with item 4.

1. Use the Switch key (SET) to switch to Setup mode.
2. Press (F1).
3. In the pull-up menu select **Password** and confirm with (↵).

   You will then be in the **Password**setup window.
4. Use (◁ ▷) to select the **delete...** button symbol and confirm with (↵).
5. Use (△ ▽) to select the **delete...** button symbol after the user and confirm with (↵).
6. Press (ESC) (so you will go immediately to the OK key) and confirm with (↵).

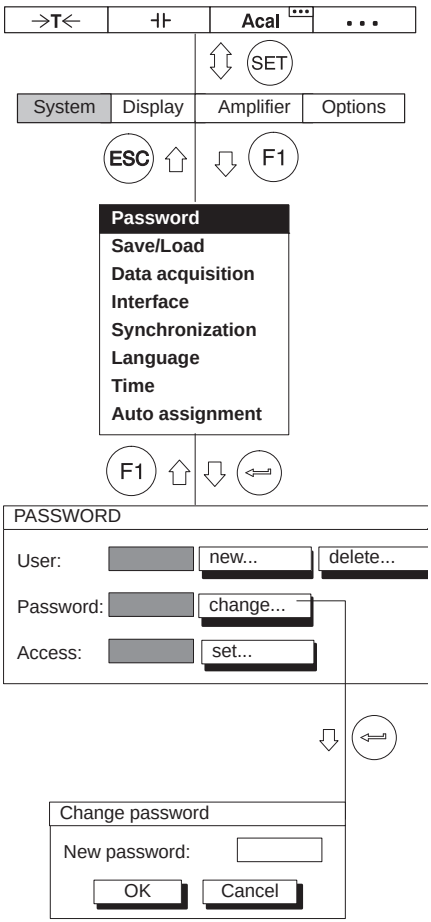

10.1.5 Change password

If you are still in the **Password** setup window, continue with item 4.

1. Use the Switch key (SET) to switch to Setup mode
2. Press (F1)
3. In the pull-up menu select **Password** and confirm with (↵) .

   You will then be in the **Password**setup window.
4. Use (◇) to select the **change...** button symbol and confirm with (↵).
5. Enter the password in the **New password** edit field and confirm with (↵).
6. Press (ESC) (so you will go immediately to the OK key) and confirm with (↵).

10.2 Save/load

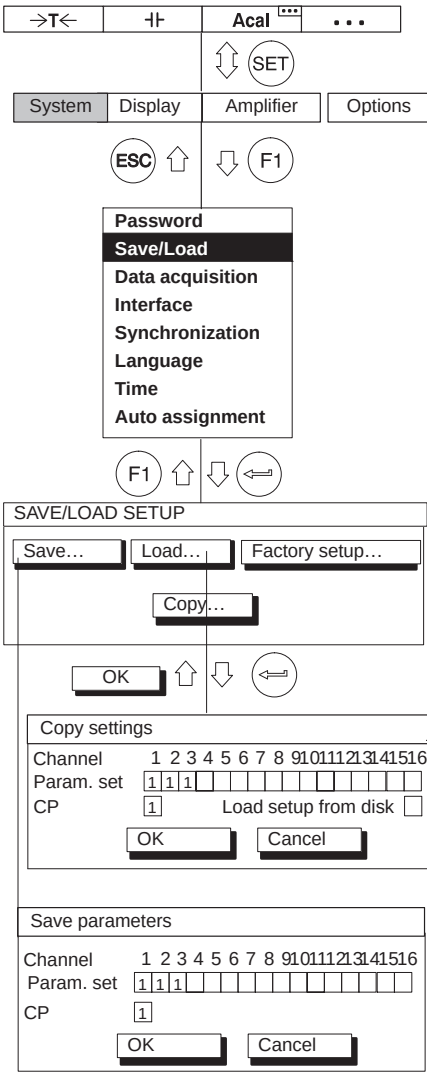

You can use the **Save/load** function to permanently save the current settings of the AB22A, the CP42/CP52 or the amplifier modules (up to 8 parameter sets per channel) or to load previously saved settings. You can load the settings in effect at the time of delivery with "Factory settings".

You can also copy the settings from one amplifier to another.

Save parameters

1. Use the Switch key (SET) to switch to Setup mode
2. Press (F1)
3. In the pull-up menu select **Save/** and confirm with (↵).

You will then be in the **Save/ settings** setup window.

4. Use (◁ ▷) to select the **Save** button and confirm with (↵).
5. In the **Param.set** activation field, under the channel number, enter the parameter set for which you want to save the settings and confirm with (↵).
6. Use (◁ ▷) to select the **OK** button symbol and confirm with (↵).

To return to measuring mode, press the Switch key (SET) and confirm the confirmation prompt with (↵).

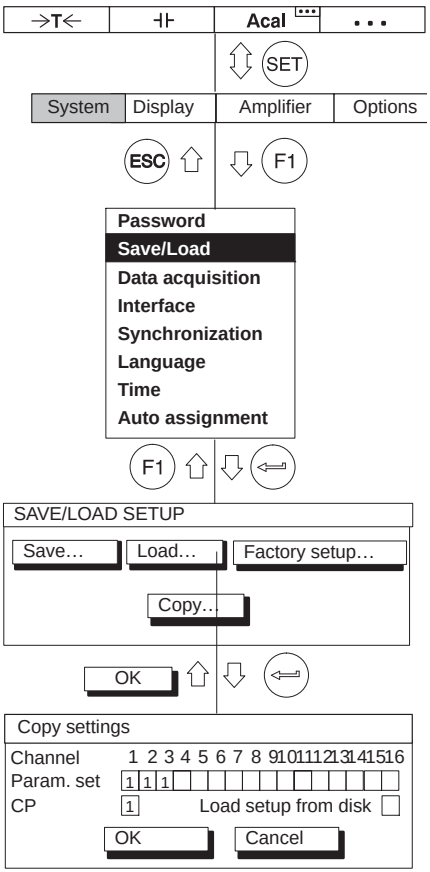

Load parameters

1. Use the Switch key (SET) to switch to Setup mode.
2. Press (F1)
3. In the pull-up menu select **Save/load** and confirm with (↵).

You will then be in the **Save/load settings** setup window.

4. Use (✥) to select the **Load** button and confirm with (↵).
5. In the **Param.set** activation field, under the channel number, enter the parameter set for which you want to load the settings and confirm with (↵).
6. Use (✥) to select the **OK** button symbol and confirm with (↵).

To return to measuring mode, press the Switch key (SET) and confirm the confirmation prompt with (↵).

Automatically from disk ☑

Settings of amplifiers that are saved on the storage medium are automatically loaded when the MGC*plus* is turned on or when the storage medium is connected to the device after the device is turned on.

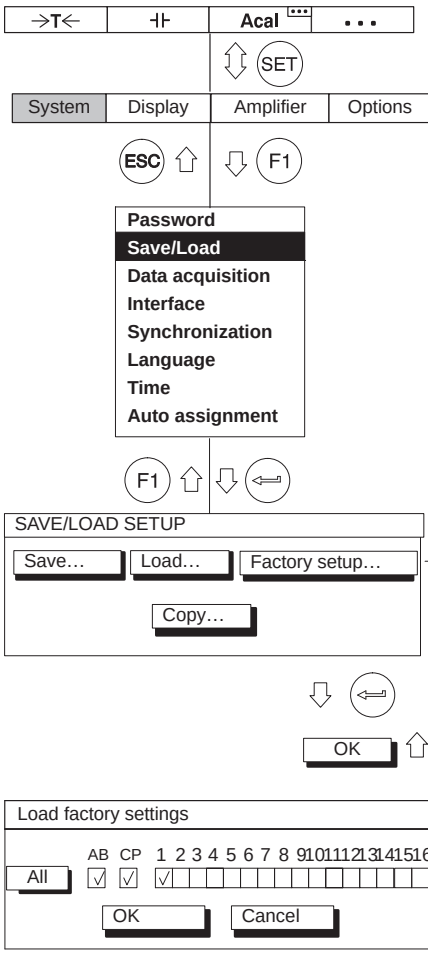

Factory settings

A new window opens under **Factory settings** where you can define whether all or only certain amplifiers should be set to factory settings. You can also load the factory settings of the display and control unit (AB) and the communication processor (CP).

1. Use the Switch key (SET) to switch to Setup mode.
2. Press (F1)
3. In the pull-up menu select **Save/load** and confirm with (⇦).

You will then be in the **Save/load settings** setup window.

4. Use (✥) to select the **Factory settings** button and confirm with (⇦).
5. Use (✥) to select the desired channels (or AB, CP as well) in control fields 1...16 and confirm with (⇦) (a check mark appears in the selection field). You can use the [All] button to mark all control fields at once.
6. For multi-channel modules, two dots appear under the channel number. When you select this type of module a window opens in which you can select individual subchannels or all of them.
7. Use (✥) to select the "OK" button symbol and confirm with (⇦).

To return to measuring mode, press the Switch key (SET) and confirm the confirmation prompt with (⇦).

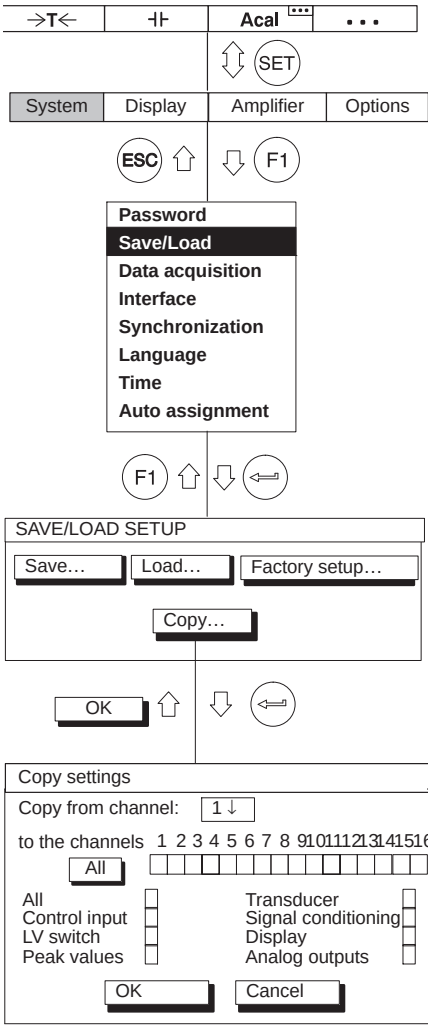

Copy amplifier

All or only certain settings can be transferred from one channel to another (or to multiple channels) as defined by the user. Use the **Copy** button to do this.

1. Use the Switch key (SET) to switch to Setup mode.
2. Press (F1)
3. In the pull-up menu select **Save/load** and confirm with (⏎).

You will then be in the **Save/load settings** setup window.

4. Use (✥) to select the **Copy** button and confirm with (⏎).
5. Use (✥) to select the channel numbers for which you want to copy the settings in the **Copy from channel** selection field and confirm with (⏎) .
6. Use (✥) to select the channels for which you want to transfer the settings in control fields 1...16 and confirm with (⏎) (a check mark appears in the selection field). To transfer all channels select **All** and confirm with (⏎).
7. Use (✥) to select which settings will be transferred in the vertical control fields and confirm with (⏎) (a check mark appears in the selection field).
8. Use (✥) to select the **OK** button symbol and confirm with (⏎).

To return to measuring mode, press the Switch key (SET) and confirm the confirmation prompt with (⏎).

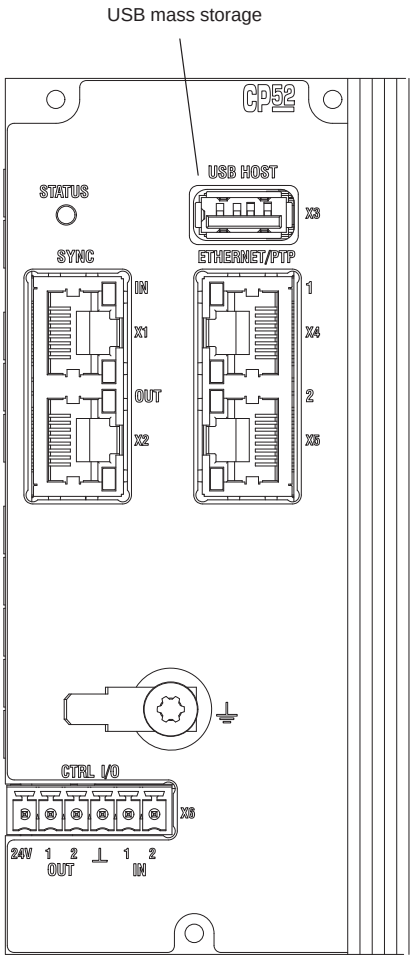

10.3 Recording series of tests

With the MGC*plus* you can configure up to 17 programs for recording series of tests (16 on the hard disk) and save the configuration.

The recording is saved in the RAM of the communication processor or to in storage medium (optional). The following types are supported:

- Formatted in the FAT-32 file system. Other file systems (for example NTFS) are not supported.

⚠ CAUTION

Prevent electrostatic discharge! The storage medium can be damaged by static discharge. Touch a grounded object before installation or wear an approved grounding armband.

The parameters for these series of tests can be adjusted either with the AB22A display and control panel or with HBM's "MGC*plus* Assistant" PC software.

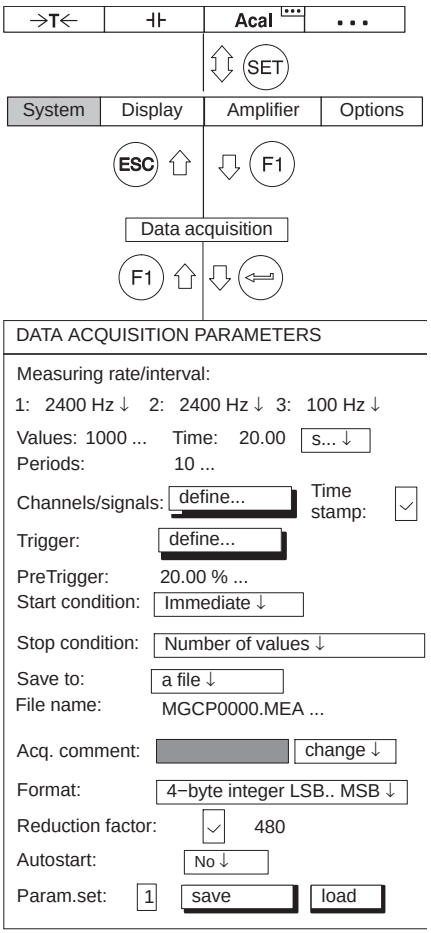

10.3.1 Setting parameters of test series

Select setup window

1. Use the Switch key (SET) to switch to Setup mode.
2. Press the (F1) function key, use the cursor keys to select **Data acquisition** and confirm with (↵).

Measuring interval/sampling rate

Desired sampling rate (> 1Hz: selection in Hz) or measuring interval (< 1 Hz: selection in seconds) for defined channels/signals. You can select three different sampling rate and assign certain channels/signals to each sampling rate (see Channels/signals).

Number

Number of measured values to be measured per measurement period.

Duration

Duration of the measurement period in seconds, minutes or hours.

Information

The number and duration affect each other. If you define the number of measured values with an assigned sampling rate, the duration will be calculated or vice versa.

Measurement periods

Number of measurement periods If zero is selected here, the measurement period will be repeated infinitely after the measurement is started with an F key.

Example:

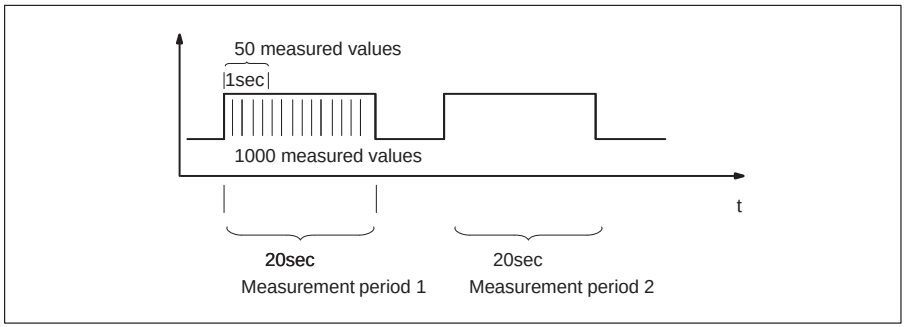
50 measured values
1sec
1000 measured values
t
20sec
Measurement period 1
20sec
Measurement period 2

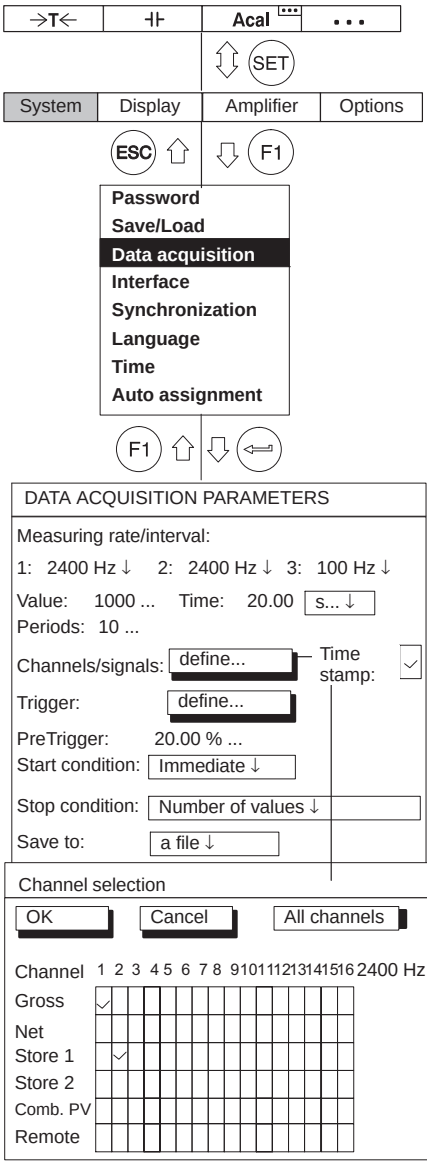

Time channel

If the time channel is selected (☑), two additional time columns appear in the data acquisition files.

Example:
You selected: Channel 2, Gross; Channel 4 Net, PV1 and Time channel.

Data acquisition information file:

Channel 2 Gross	Channel 4 Net	Channel 4 PV1	Time channel 1	Transfer Time channel

Channels/signals

Selection of channels and signals (Gross, Net, PV1, PV2, Combined peak value, Remote) for the current series of tests. "All channels" is used to activate or deactivate all channels. The selection of signals in the first column is retained intact. Assignment for sampling rate (1, 2 or 3)

Information

If multiple (≥2) signals are selected for a channel (for example Gross and Net), the highest possible sampling rate is reduced to 2400Hz!

DATA ACQUISITION PARAMETERS

Measuring rate/interval: 300Hz ↓
Values: 1200 ... Time: 4.0 s... ↓
Periods: 1 ...
Channels/signals: define... Time stamp:
Trigger: define...
PreTrigger: 20.00 % ...
Start condition: Immediate ↓
Stop condition: Number of values ↓
Save to: a file ↓
File name: MGCP0000.MEA ...
Acq. comment: change ↓
Format: 4–byte integer LSB.. MSB ↓
Reduction factor: 480
Autostart: No ↓
Param.set: 1 save load

Trigger function

To use the trigger function you must first define the trigger conditions.

There are *three trigger types* available:

1. Start trigger (with maximum four trigger conditions)
2. Stop trigger (with maximum four trigger conditions)
3. Sampling rate trigger (with start and stop)

One start condition and one stop condition (trigger condition) can be:

- a measured value level
- a limit switch
- a measured value band
- an external input signal

These start/stop conditions can be defined independently of each other and can be combined with each other. The AND function and OR function are available for this purpose (➔ *see also page 248*):

Example

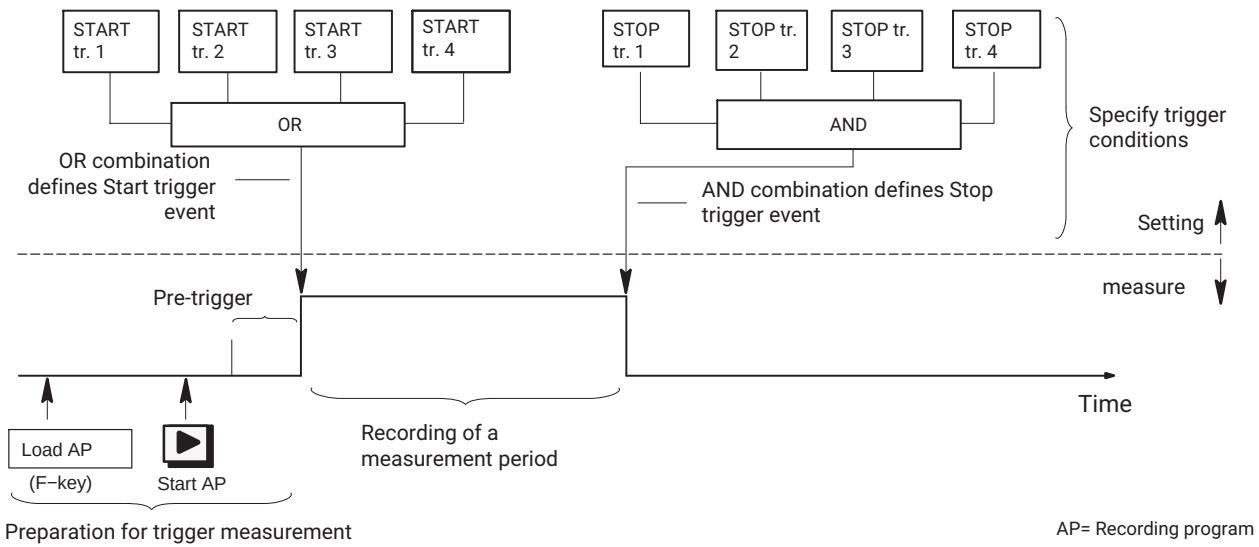

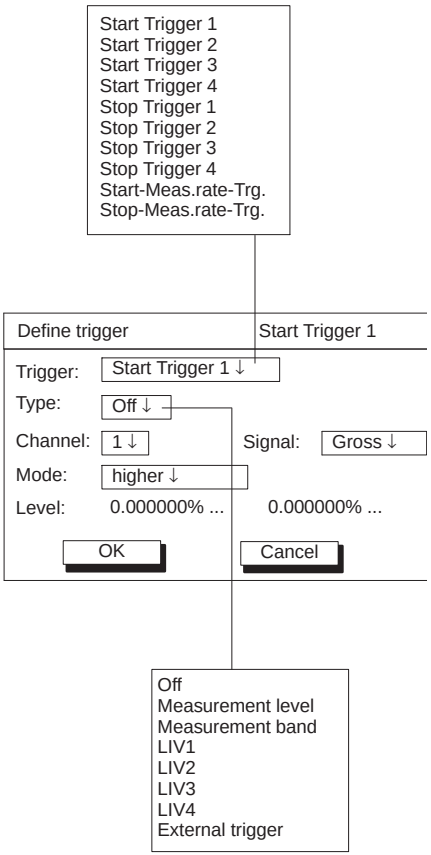

In the example on ➔ *page 246* the following could have been defined as a start condition:

- Start measurement when force greater than 5 kN

  or

- when pressure is less than 5 bar

  or

- when temperature is higher than 22 °C

Define trigger

Specify here whether data acquisition starts immediately after the start or whether a specific trigger event starts or stops the data acquisition.

Trigger

You can set up to four different start and stop triggers and a "sampling rate trigger".

Sampling rate trigger

The start sampling rate trigger changes the sampling rate when the trigger event occurs.

Example:
The trigger event switches measurement from a long duration measurement (e.g. measurement interval = 10000sec) to dynamic measurement (e.g. sampling rate = 1200Hz).

Setting the trigger functions of the communication processor digital inputs via the display and control unit AB22A is not possible.

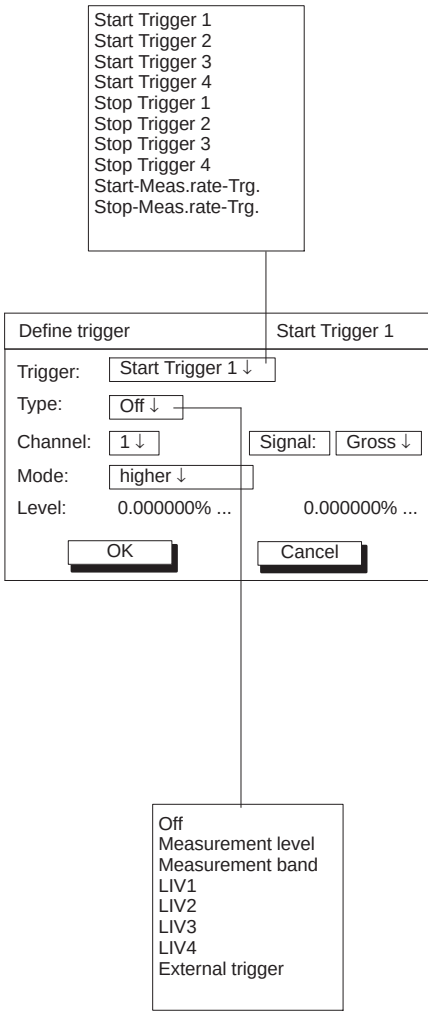

Mode

Configure start/stop conditions.

Off: Trigger inactive

Measurement level: The trigger condition is triggered when the measurement signal exceeds/undershoots the level value.

Example:

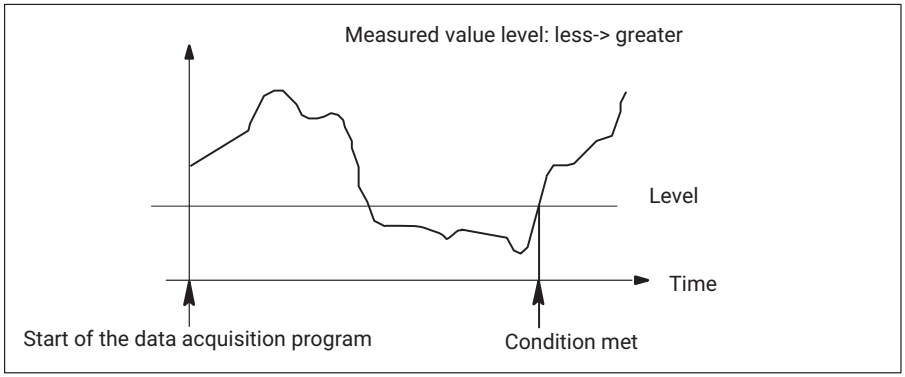

Example:

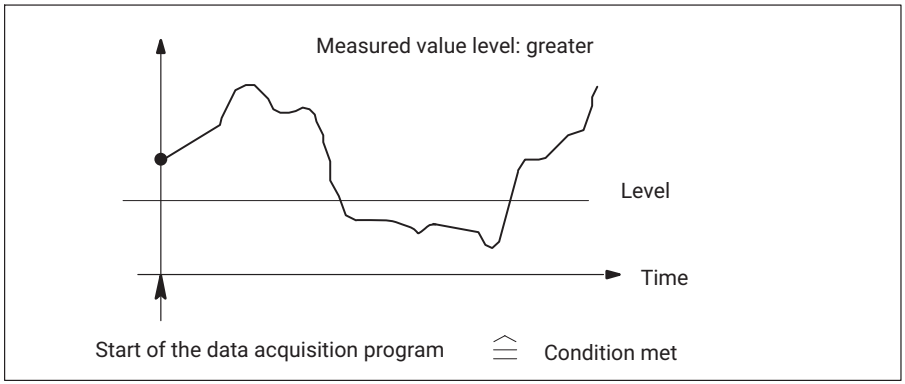

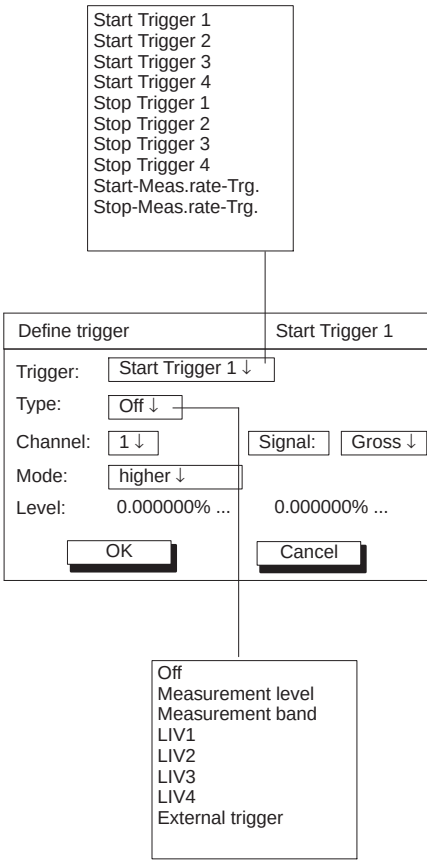

Measured value band: The trigger condition is triggered when the measurement signal exceeds/undershoots the band limits. The band lies between "Level 1" and "Level 2".

Example:

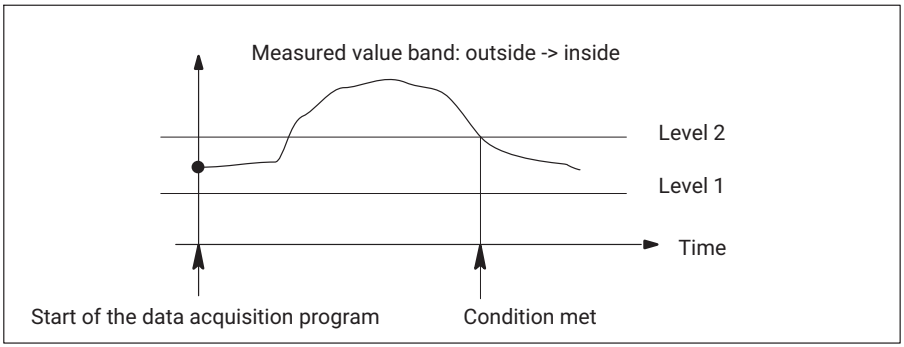

Example:

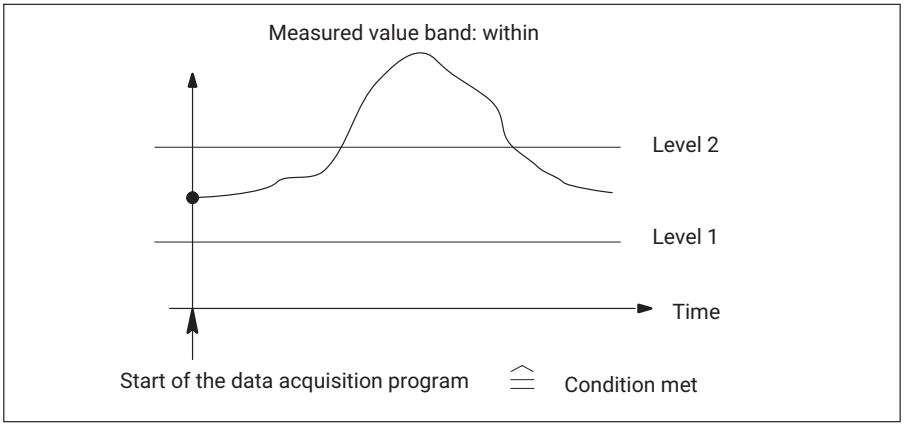

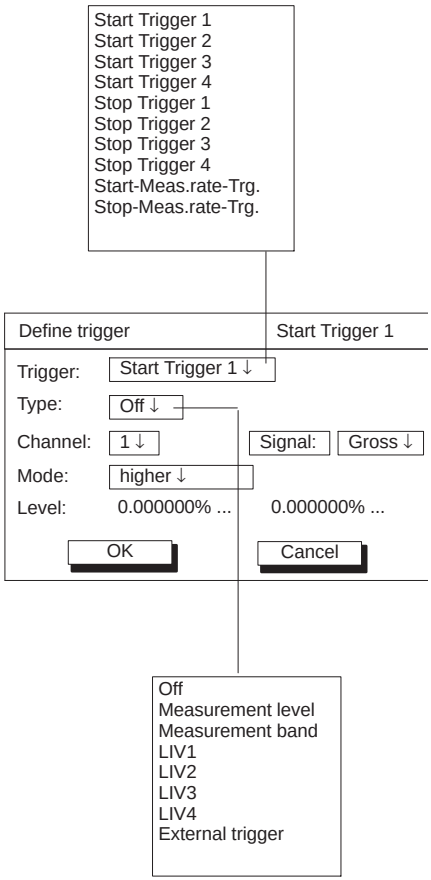

LV1-LV4: The trigger is in response to a limit value (High: LED on, data acquisition program is started; Low: LED off)

External trigger: The trigger is in response to an external signal (remote control 7 on the connection board).

Channel

Source channel for the trigger definitions.

Signal

Source signal for the trigger definition.

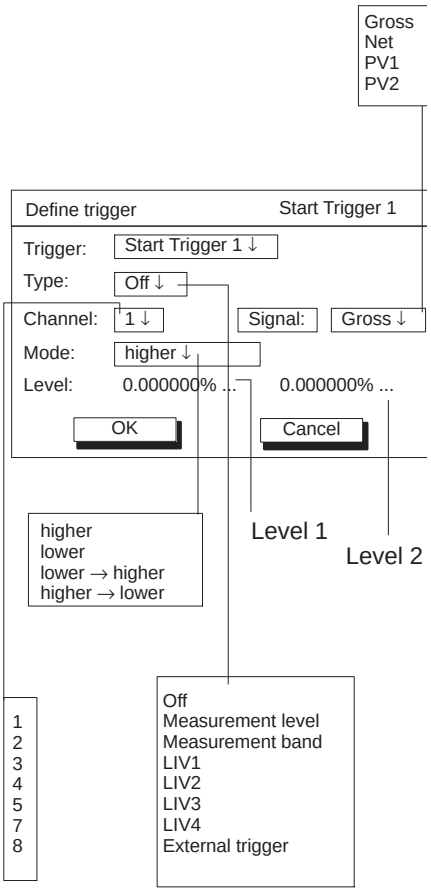

Mode

You can use this mode to define when a trigger condition is met.

You can set different modes depending on which trigger type is set:

Type	Mode
Measured value level	higher; lower; lower -> higher; higher -> lower
Measured value band	Inside; outside; outside -> inside; inside -> outside
Limit value	high, low; low -> high; high -> low
External trigger	high, low; low -> high; high -> low

Example: greater

The trigger condition is only met when the measurement signal is greater than the trigger level.

Level

The level determines the differential value with which the measurement signal is compared.

Depending on which type is set, 0, 1 or 2 trigger levels are active.

Type	Which level is significant?..
Measured value level	Level 1 only
Measured value band	Level 1 and level 2
Limit value	-
External trigger	-

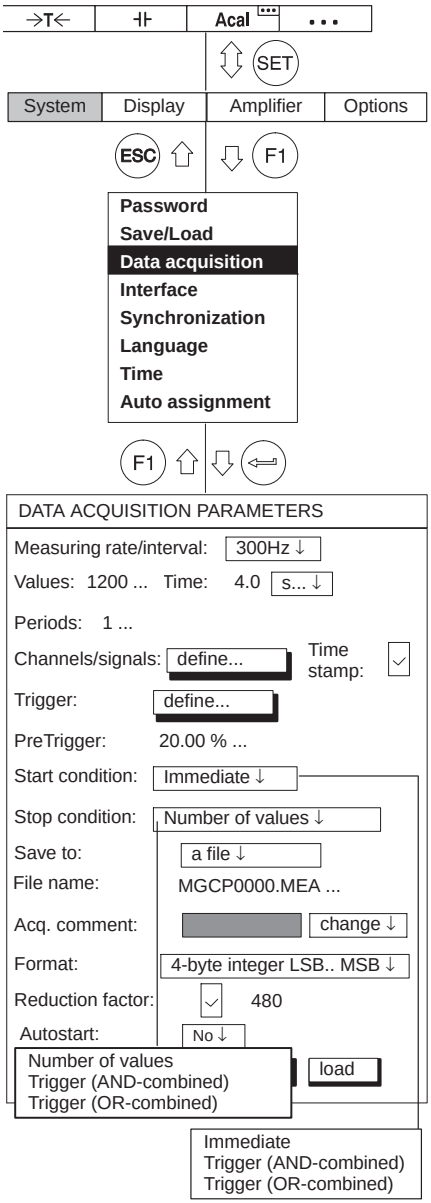

Pre-Trigger

You can define in the Pre-trigger input box how many measured values to record before the trigger event (measurement acquisition is divided into the pre-trigger range and the post-trigger range). The definition refers to the "Number" entry field in the settings dialog.

Example:

Number: 1.200

Pre-trigger: 20%

240 measured values are acquired in the pre-trigger range and 1200-240 = 960 measured values are acquired in the post-trigger range.

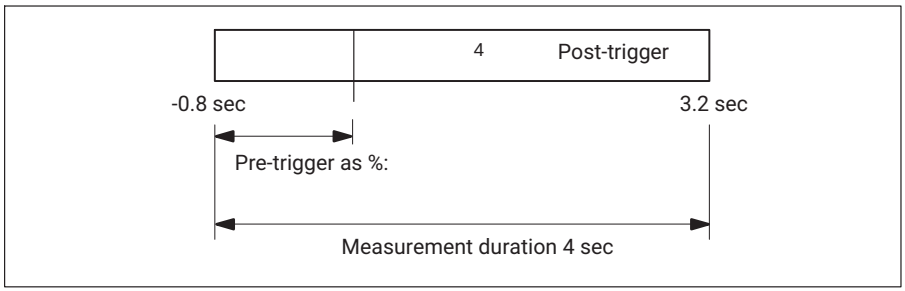

Start condition

Immediately:	Ignore Start trigger. Data acquisition begins immediately after the start.
AND-combined:	*All* start conditions must be met to start data acquisition.
OR-combined:	Data acquisition starts when *one* of the start conditions is met.

Information

If only 1 trigger is turned on (for example start trigger 1), trigger AND/OR must be selected (even though no combination is possible).

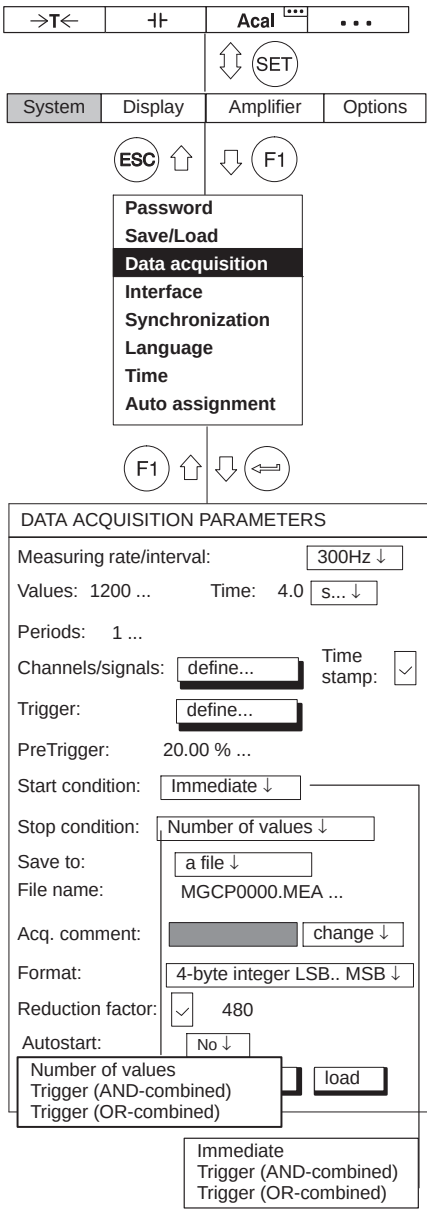

Stop condition

Number of measured values: The measurement ends when the number of measured values specified (entered under "Number") is reached.

AND-combined: *All* stop conditions must be met to stop recording data.

OR-combined: Data logging ends when *one* of the stop conditions is met.

Save to

A file: Recording to a file on the hard disk of the MGC*plus*. Enter the name under "File name".

Information

The file will not be overwritten when the measurement program is restarted. Instead the counter will be incremented (last first four letters are retained and the last four are incremented).

Multiple files: Recording to multiple files on the hard disk of the MGC*plus* (max. 999)

Information

If you activate compression, only one file will be created.

Internal RAM: Recording to the internal RAM of the communication processor

Recording information file

If you selected "Recording to a file", assign the name of the file here.

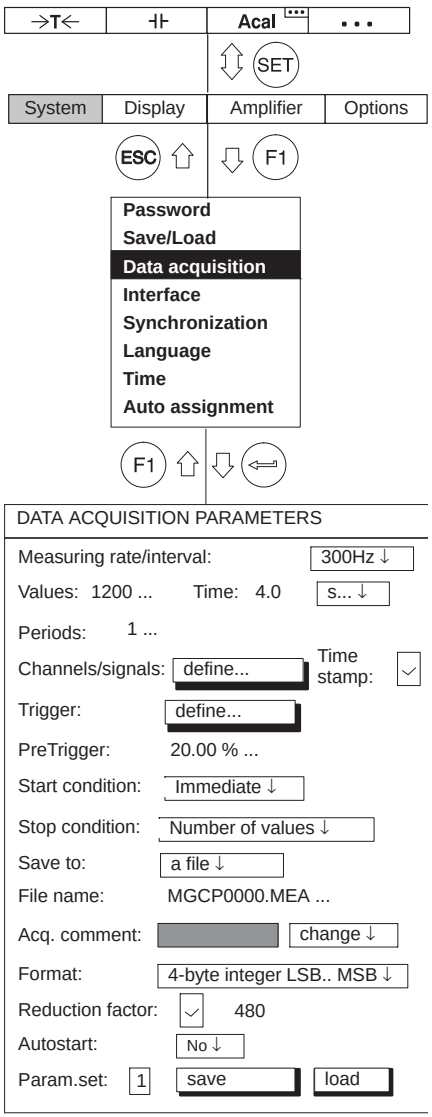

Information

Measured value files larger than 2 Gbyte cannot be processed on computers with Windows® operating systems. The communication processor will therefore close the file if it has a size of 2 Gbyte and will continue recording in a new file.

Acq. comment

You can assign any comment you choose to the recording. The comments can be seen at the top left of the display with image type **Data acquisition**.

Change data acquisition comments

You can change an existing comment, i.e. re-enter it or add to it.

Select data acquisition comments

You can select from the comments saved on the storage medium (➔ *see also page 226ff, "Load recording comments*").

Recording format

The recording format depends further processing of how measured values. You can select from three different formats: 4-byte INT, 2-byte INT and 4-byte FLOAT.

Information

HBM software packages such as MGCplus Assistant or catman are able to detect all three formats automatically and scale the values accordingly.

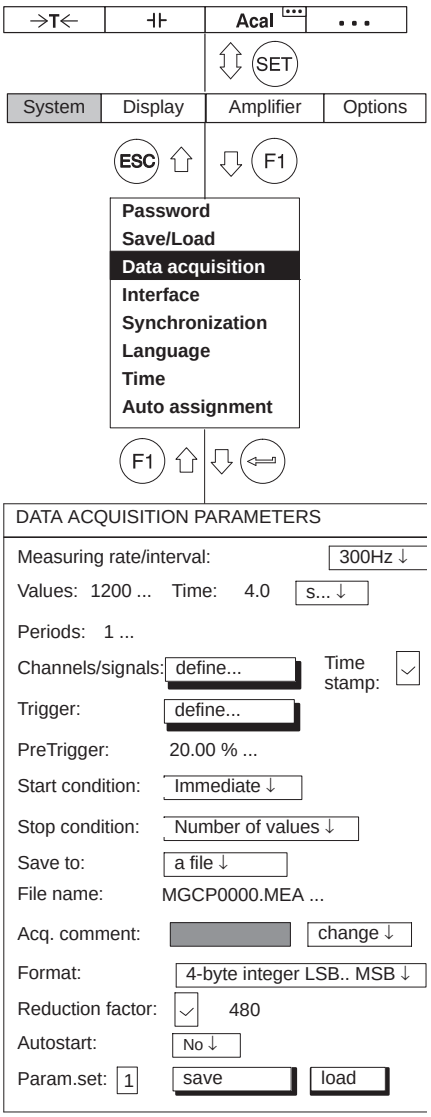

Compression factor

When you activate data compression ( ), an additional data set is created on the storage medium while measured values are being recorded. In addition to all measured values, extreme values (Min/Max) are also saved in this data set at the assigned time interval.

The time interval is determined by the compression factor relative to the set sampling rate.

You can enter a compression factor from 480 to 32767.

Example:

Data rate: 2400 Hz
Compression factor: 480

$$\frac{2400\text{Hz}}{480} = 5\text{Hz} \triangleq 200\text{ ms time interval}$$

The extreme values are recorded at a time interval of 200 ms (recording rate 5 Hz).

Information

A reduced data set can only be created if only one signal is recorded per channel (with the exception of Gross/Net/PV1/PV2 ➔ see page 245).

. . . Recording format

Reading a recorded file

To be able to read and interpret the data in the file, you must be familiar with the internal format of the file. The data is recorded in a binary file structured as follows:

The following header data items come before the actual data area:

- File ID (4-byte LONG) // currently = 6001
- Number of channels (4-byte LONG)
- Length of a data line (i.e. one measured value for all channels/signals) in bytes (4-byte LONG)
- Number of data lines (i.e. measured values/channel) in the file (4-byte LONG)
- The data format used to save measured values (4-byte LONG)
- Sampling rate used to acquire measured values (4-byte LONG)
- Size of the header area in bytes (4-byte LONG) // currently = 512
- Reserved (4-byte LONG)

Then the following items for each channel:

- Channel number (4-byte LONG)
- Scaling information: Measuring range MR (4-byte FLOAT)
- Scaling information: Offset (zero offset) OS (4-byte FLOAT)
- Unit (4-byte CHARACTER)
- Signal mask (4-byte LONG)

The signal mask indicates how many values will appear in the data line per channel:

- Bit 0 set: GROSS signal
- Bit 1 set: NET signal
- Bit 2 set: Peak value 1
- Bit 3 set: Peak value 2

This means that a maximum of 4 consecutive values can be displayed for each individual channel.

This channel block is followed by information about the date and time:

- TimeDate (30-byte CHARACTER)

The bytes that follow to the end of the header are reserved for future use and may be left out. They are followed by the values, data line for data line (the example shown here is based on bit 0 (Gross) and bit 2 (peak value 1) being set):

- C1, 1 (Gross) C1: Channel 1
- C1, 1 (PV1)
- C2, 1 (Gross)
- C2, 1 (PV 1)

_____

New data line

- C1, 2 (Gross)
- C1, 2 (PV 1)
- C2, 2 (Gross)
- C2, 2 (PV 1)

Each value (measured value) takes up 4 bytes (data formats 1253=LONG and 1257=FLOAT) or 2 bytes (data format 1255=INT). Integer formats are saved in INTEL (TM) format, i.e. MSB -> LSB.

Depending on the data format used for data acquisition, the raw values must be scaled for each channel:

- 1253 (LONG): Physical value = (binary raw value) / (256*7680000) * MR + OS
- 1255 (INT): Physical value = (binary raw value) * 256 / 7680000) * MR + OS
- 1257 (FLOAT): Physical value = (binary raw value)
- MR: Measuring range
- OS: Offset

Information

The 1253 LONG format contains status information in the least significant byte. To access this status, you should check this byte first (!) Scale, since this will cause the least significant byte to be lost due to division by 256.

The status byte is structured as follows:

- Bit 0: Limit value output 1 active if set
- Bit 1: Limit value output 2 active if set
- Bit 2: Limit value output 3 active if set
- Bit 3: Limit value output 4 active if set
- Bit 4: Overflow of Gross signal if set
- Bit 5: Overflow of Net signal if set
- Bit 6: Calibration counter error if set
- Bit 7: Amplifier settings that are changed during the measurement (for example by remote control) if they are set

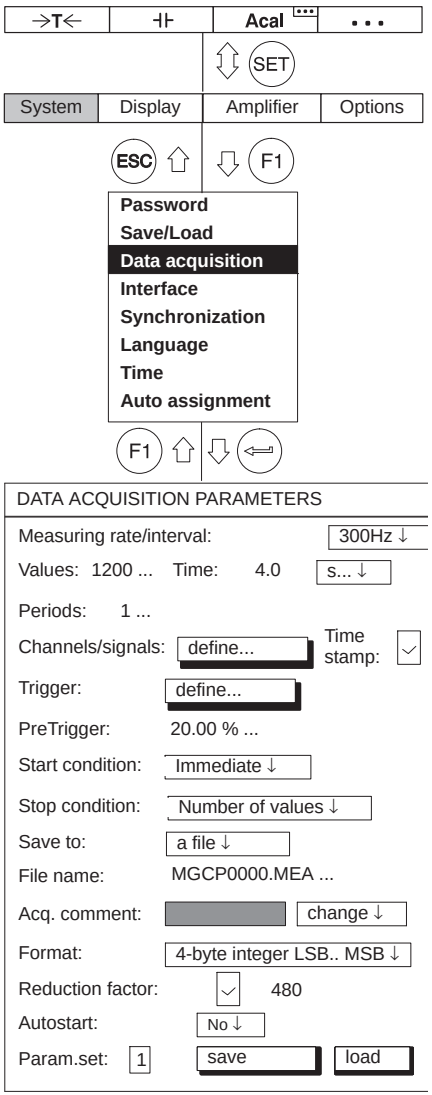

Autostart

Information

You can save all the settings (start/stop conditions, etc.) in a recording parameter set and reload it. To use a parameter set, you must assign two function keys:

- Assign one function key with the **Load recording parameters** function. Press the F-key to read the parameter set.
- Assign a second function key with the **Start/stop data acquis.** (▶) function. Press the F-key to start the recording program.

The Autostart function defines what will happen after loading a recording parameter set.

YES: After the recording parameter set is loaded, a data acquisition starts automatically. A second function key is not needed.

NO: After the data acquisition parameter set is loaded, the data acquisition must be started with a second function key (▶).

ParaSetNo

You can enter parameter set numbers between 0 and 16 (0: parameter set will be saved in Flash-PROM of the communication processor; 1 - 16: parameter set will be saved on the hard disk of the MGC*plus*). The numbers must be assigned first so that the next higher one will be displayed.

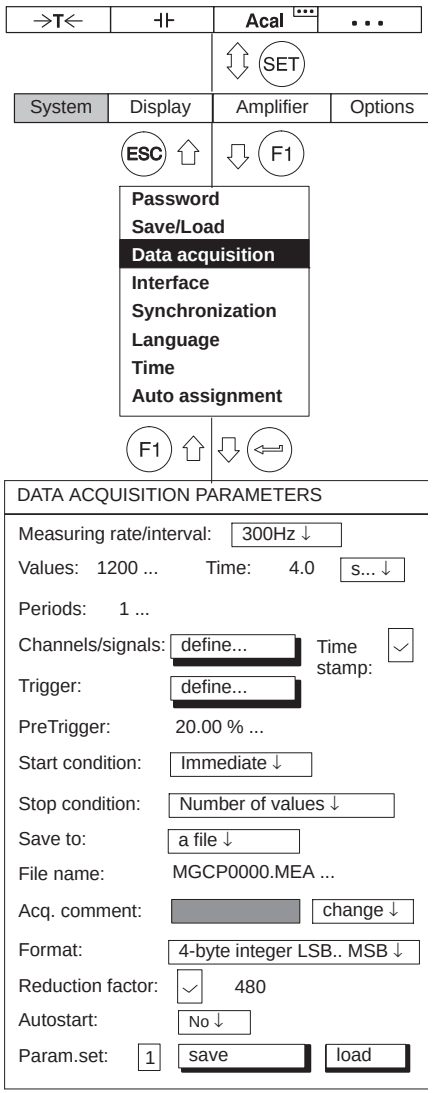

Save

The recording parameters are saved in the selected parameter set.

You can save up to 16 measured value recording programs on the hard disk of the MGC*plus*.

Load

A recording parameter set - saved under a ParaSetNo. - is loaded into MGC*plus*. Now you can view this recording parameter set or if necessary change it and save it again.

10.3.2 Format of the MGC*plus* measurement files

When measurements are recorded on a storage medium, files with the extensions *.mea, *.me1 and *.me2 are created. All the channels recorded at sampling rate no. 1 are stored in the file with the extension mea, those at measuring rate no. 2 in the file with the extension me1 and those at sampling rate no. 3 in the file with the extension me2.

If the "Compression factor" option is also activated, additional files will be formed with the extensions "sto", "st1" and "st2", containing an extract of the minimum and maximum sample block values.

When measured values are recorded in files with the extensions mea, me1 and me2, the following options have to be considered:

- Time channel yes/no

If yes, the format of the time channel

MGC*plus* Device Time

- NTP time format
- IRIG time format

Measured value format

- 4-byte INT (LSB ... MSB)
- 2-byte INT (LSB ... MSB)
- 4-byte Float (LSB ... MSB)

10.3.2.1 Measured values

The measured values of each MGC*plus* channel are transmitted with 4 bytes: The Least Significant Byte contains the measurement status, the other three bytes contain the measured value. The following table shows the format of the measured values at the internal data interface of the MGC*plus* system.

LSB Byte 0								**Byte 1**	**Byte 2**	**MSB Byte 3**
Status information								Measured value (24 bits)		
Bit no.										
0	1	2	3	4	5	6	7			
LV1 status	LV2 status	LV3 status	LV4 status	Gross value overflow	Net value overflow	Calibration error	Change flag			

This status information is displayed as an integer in the range $s \in \{0 \ldots 255\}$.

When measured values are imported from an MEA file (4-byte INT format) the status is checked to see whether it is s>15. If it is, the corresponding measured value is replaced by a number defined by the user.

If measured values are stored in an MGC*plus* measurement file in a different format than 4-byte INT, information about the measurement status is irrevocably lost. So we recommend that the 4-byte format is always used when saving.

An example of how 32-bit INT values in the status and the physically scaled measured value can be converted, is given below. In this example, the variable z is one such 32-bit value.

$$z \in \{-2.147.483.647, \ldots, 2.147.483.648\}$$

The status s is obtained by carrying out the following mathematical operations.

$$s = z - 2^8 \cdot \left\lfloor \frac{z}{2^8} \right\rfloor \text{ 1)}$$

Obviously, it would be far more efficient to perform this operation in a programming language such as C++ or Visual Basic, with the aid of bitshifting operators (SHR, SHL).

The physically correctly scaled measured value can be calculated by applying the following operation:

$$y = \frac{z \cdot c_{scale}}{(2^8 \cdot 7.680.000)} - c_{offset}$$

1) The notation $\lfloor x \rfloor$ here describes the floor function, which rounds the number down to the next smallest integer: $\lfloor 12.2 \rfloor = 12$; $\lfloor -12.2 \rfloor = -13$

c_{scale} and c_{offset} represent the scaling information which is contained in the relevant amplifier and also in the measurement files on the PC card hard disk.

10.3.2.2 Time channels

The *"MGCplus Device Time"* time channel (called the "HBM" time channel in the AB22A) is used to count 76.8 kHz periods. 46 bits are available for the time count, so it will take 29 years for the counter to overflow.

$$t_{tot} = \frac{2^{46}}{76800}\ s = 916.259.689,8133\ s = 10.604,86\ d \approx 29.05\ a$$

The table below shows the "MGC*plus* Device Time" format.

Counter 1				Counter 2			
Byte 0	Byte 1	Byte 2	Byte 3	Byte 0	Byte 1	Byte 2	Byte 3
8-bit status	23-bit counter + 1 bit sign			8-bit status	23-bit counter + 1 bit sign		
Bit no.							
0 7	8 31			0 7	8		

In this format the time begins to be counted after the MGC*plus* system starts up with t=0.

The format of the *NTP time* is an absolute format that contains the system time of the communication processor. The time information is split between 2 counters of 32 bits each, with one counter containing the number of seconds since January 1, 1970 00:00:00 UTC and the second counter counting the µs in the current second.

After February 7, 2106 (that is in about 100 years) there will be problems with the NPT time.

IRIG time channel

This time channel is only available in conjunction with an ML01B on which special firmware is installed (ML0135BP535.F72). This module is synchronized to an external IRIG-B source and makes the time information available in the system. The format of this time channel is identical to NTP format (see below) with the only difference being that the second component only contains the seconds of the current year that have passed. *So the channel always overflows with every new year!*

10.3.3 MEA format in detail (MGC binary format 2)

MGC*plus* measurement files consist of a file header, a section with channel parameters for all channels, a section with information on the amplifier and a block with the actual measurement data (not shown in this table).

Header

Offset	Type	Content
0	long	File-ID (6001)
4	long	Channel Count
8	long	Size of Measurement Line in Byte
12	long	Number of Measurement Lines in file
16	long	Measurement Value format
20	long	Base Sample Rate (IDS Code e. g. 6317)
24	long	Data Offset in Bytes (Start of Meas. Values in file)
28	long	Time Channel Format (TCS command, only with CP42)

Channel parameter for all channels

Offset	Type	Content
Offset+0	long	Channel Number
Offset+4	float	Scaling Factor
Offset+8	float	Offset
Offset+12	char	Unit[4]
Offset+16	int16	Signal-Bitfield (in the lower 6 Bits Gross-, Net- and others are specified)
Offset+18	int16	Subchannel number

Amplifier settings for all channels

Offset	Type	Content
Offset+0	char[47]	channel name (UCC-String)

Offset	Type	Name	Content
Offset+0	char	chn_code	channel_code
Offset+1	char	amp_code	amplifier_code
Offset+2	char	para_flg	parameterflag (1..8: internal, 9: XM001)
Offset+3	char	tab_quelle	where's the table from ?
Offset+4	char	acal_flg	autocal used ?
Offset+5	char	loca_flg	local/remote used ?
Offset+6	char	meas_flg	measurement/zero flag
Offset+7	char	stat_flg	display of status ?
Offset+8	int	bridget	Bridge Type
Offset+10	char	bridgev	bridge Supply Voltage
Offset+11	char	shuntflg	shunt used ?
Offset+12	char	spwt1_flg	flag peak value 1
Offset+13	char	spwt2_flg	flag peak value 2
Offset+14	float	spwt1_time	time constant peak value 1
Offset+18	float	spwt2_time	time constant peak value 2
Offset+22	char	spwt_mode	mode for combined peak value (CPW)
Offset+23	char	vo1_flow	signal source for analog out vo1
Offset+24	char	vo2_flow	signal source for analog out vo2
Offset+25	char	tp_character	Lowpass filter type
Offset+26	int	frequency	Lowpass frequency index
Offset+28	float	ana_anzeig1	scaling analog output voltage 1
Offset+32	float	ana_vol1	
Offset+36	float	ana_anzeig2	scaling analog output voltage 2
Offset+40	float	ana_vol2	
Offset+44	float	sig1	input pkt 1 float
Offset+48	float	anzeig1	
Offset+52	float	sig2	
Offset+56	float	anzeig2	
Offset+60	float	anzeigenull	

Offset	Type	Name	Content
Offset+64	char	unit_range[4]	String for Unit at Range setting
Offset+68	char	ind1point	indication adaptation dec. point (range 1)
Offset+69	char	ind1step	indication adaptation increment (range 1)
Offset+70	char	unit_txt1[4]	default display units (range 1)
Offset+74	char	unit_anz[4]	display unit
Offset+78	float	cav_null	
Offset+82	float	cav_end	
Offset+86	long	k_factor	gage factor/k_faktor
Offset+90	float	tarafloat	tare value
Offset+94	float	nulltarget	
Offset+98	float	taratarget	
Offset+102	char	gw1_steub	Limit Value bytes
Offset+103	char	gw2_steub	
Offset+104	char	gw3_steub	
Offset+105	char	gw4_steub	
Offset+106	float	gw1_onf	Switch On Level Limit Value 1
Offset+110	float	gw2_onf	Switch On Level Limit Value 2
Offset+114	float	gw3_onf	Switch On Level Limit Value 3
Offset+118	float	gw4_onf	Switch On Level Limit Value 4
Offset+122	float	gw1_hyst	Switch Off Level Limit Value 1
Offset+126	float	gw2_hyst	Switch Off Level Limit Value 2
Offset+130	float	gw3_hyst	Switch Off Level Limit Value 3
Offset+134	float	gw4_hyst	Switch Off Level Limit Value 4
Offset+138	int	highpass	Highpass-Filter
Offset+140	char	signal	
Offset+141	char	prt_flg	print format
Offset+142	char	remote1	Index for window function
Offset+143	char	remote2	
Offset+144	char	remote3	

Offset	Type	Name	Content
Offset+145	char	remote4	
Offset+146	char	remote5	
Offset+147	char	remote6	
Offset+148	char	remote7	
Offset+149	char	remote8	
Offset+150	char	group_kenn	group assignment
Offset+151	char	ver_flg	
Offset+152	int	ver_sig1	
Offset+154	int	ver_sig2	
Offset+156	int	ver_sig3	
Offset+158	int	ver_sig4	
Offset+160	char	ver_type	
Offset+161	char	isr_wert	Output Sample-Rate
Offset+162	int	delay_time	
Offset+164	uchar	delay_con	
Offset+165	char	abs_flag	
Offset+166	char	lock_flag	locking of special functions (Zeroing)
Offset+167	char	reserved[10]	Reserved for Extensions
Offset+177	char	subchan	subchannel

Date-Time String

Offset	Type	Content
Offset+0	char[26]	Date and Time of file creation (MGC System Time) e. g. Wed Sep 03 14:43:06 1997

Comments

Offset	Type	Content
Offset+0	char[80]	comment of measurement
Offset+80	char[80]	comment of active parameter set

Slot specific data

Offset	Type	Content
Offset+0	INT32	Number of used slots

For each used slot static and dynamic slotparameter

Offset	Type	Content
Offset+0	INT32	Slotnumber (Channel number)
Offset+4	INT32	No. of Bytes of the Block with static slotparameter
Offset+8	INT8[15]	serial number of amplifier
Offset+23	INT8[15]	serial number of AP 1 (Slot A)
Offset+38	INT8[15]	serial number of AP 2 (Slot B)
Offset+53	INT16	AP code (e. g. 5500 for AP01)
Offset+55	INT16	SAD1 Code
Offset+57	INT16	SAD2 Code
Offset+59	INT8[15]	User Info (IDS?299) from AP (with PRG800,299,"String" prog.)
Offset+74	INT8[]	filled until size (see Offset+4 ...)
Offset+0	INT32	No. of Bytes of the blocks with dynamic slot parameters
Offset+4	INT32	length of the following parameter
Offset+8	INT32	Type of the following parameter (IDS Code)
Offset+12	INT8[]	Parameters
Offset+x	INT32	length of the next parameter.....etc.È

After data offset (LONG value from byte 24, see header) the measured data is available in the following form:

```
for channel
    for signal
        measured value
    end
end
```

10.4 Interface

You can use the **Interface** function to adjust the characteristics of the interfaces:

- Device address
- Subnet mask
- DHCP Yes or No
- Baud rate
- Format (word length, parity, stop bit)

The following interfaces are available with the CP42 and CP52 communication processor:

CP52:

- 2 x independent Ethernet (DHCP capability), upper interface (X4) additionally with PTP- and APIPA capability
- RS232 (optionally via USB/RS232 converter)

CP42:

- Ethernet (permanent IP address)
- USB
- RS232

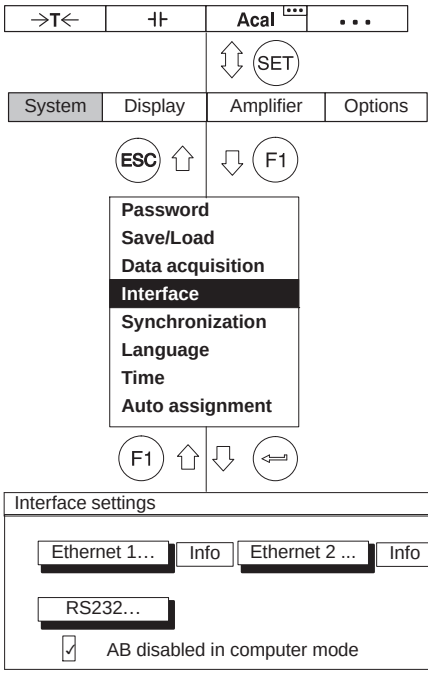

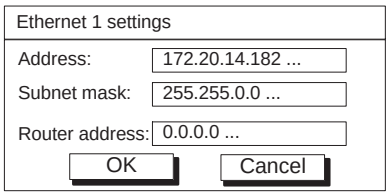

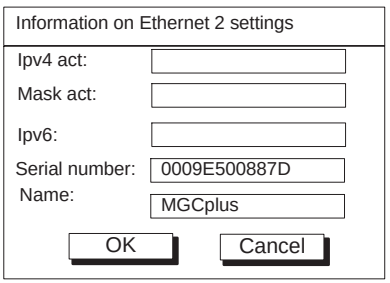

If you access the MGC*plus* measuring amplifier system from your PC through a router, you must specify the address of the router in MGC*plus*.

Please note that the CP52's two Ethernet interfaces are not in the same subnet.

Direct Ethernet connection between PC and MGC*plus* with DHCP/APIPA

The CP52 communication processor has two independent Ethernet interfaces. The upper interface (X4) has DCHP and APIPA capability, the lower interface (X5) has only DHCP capability. The CP52 is delivered from the factory with DHCP adjusted on both interfaces.

To connect your PC with a CP52 in a network with a DHCP server (as is typical in most companies), both the PC and the CP52 must be set to DHCP. The DHCP administers the IP addresses of all the devices in the network and assigns IP addresses to both.

If there is a direct connection between the PC and CP52 (without network connection with a DHCP server) addresses are also promptly assigned to the PC and CP52 by means of automatic addressing (APIPA) and the connection can be made. This only applies to the upper Ethernet interface (X4).

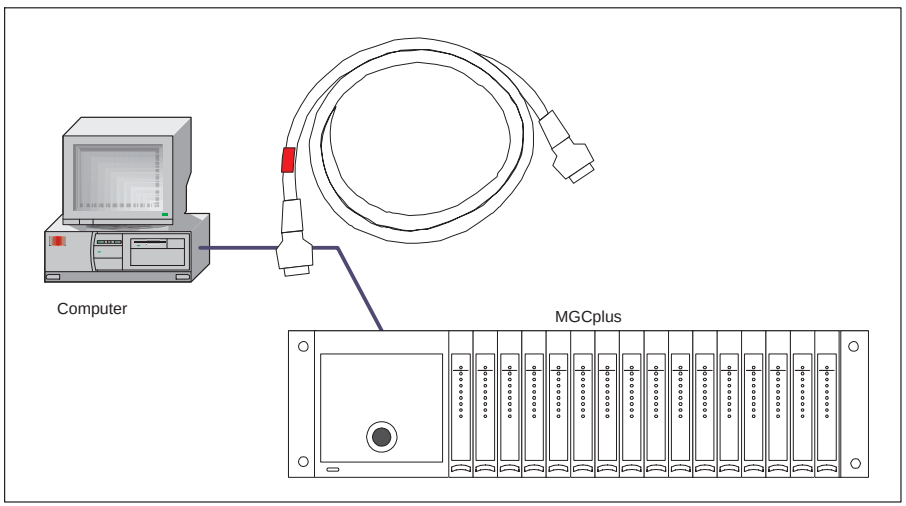

Direct Ethernet connection between PC and MGC*plus* with permanent IP addresses

For example, if your computer has the IP address 172.34.24.13, your MGC*plus* should have IP address 172.34.24.x (x≠13, x≠255) if you are using a subnet mask 255.255.255.0.

If you connect the MGC*plus* to a PC via a hub, use a patch cable.

The CP52's upper Ethernet interface (X4) is DHCP- and APIPA-capable, the lower Ethernet interface (X5) is only DHCP-capable. The CP52 is delivered from the factory in the DHCP setting on both interfaces.

The Ethernet interfaces of the CP22 and CP42 are not DHCP- or APIPA-capable and are therefore delivered with the following permanent IP addresses:

CP42:

IP address = 192.168.169.134
Subnet mask = 255.255.255.0
Router = 0.0.0.0

CP22:

IP address = 192.168.169.252
Subnet mask = 255.255.255.0
Router = 0.0.0.0

Router

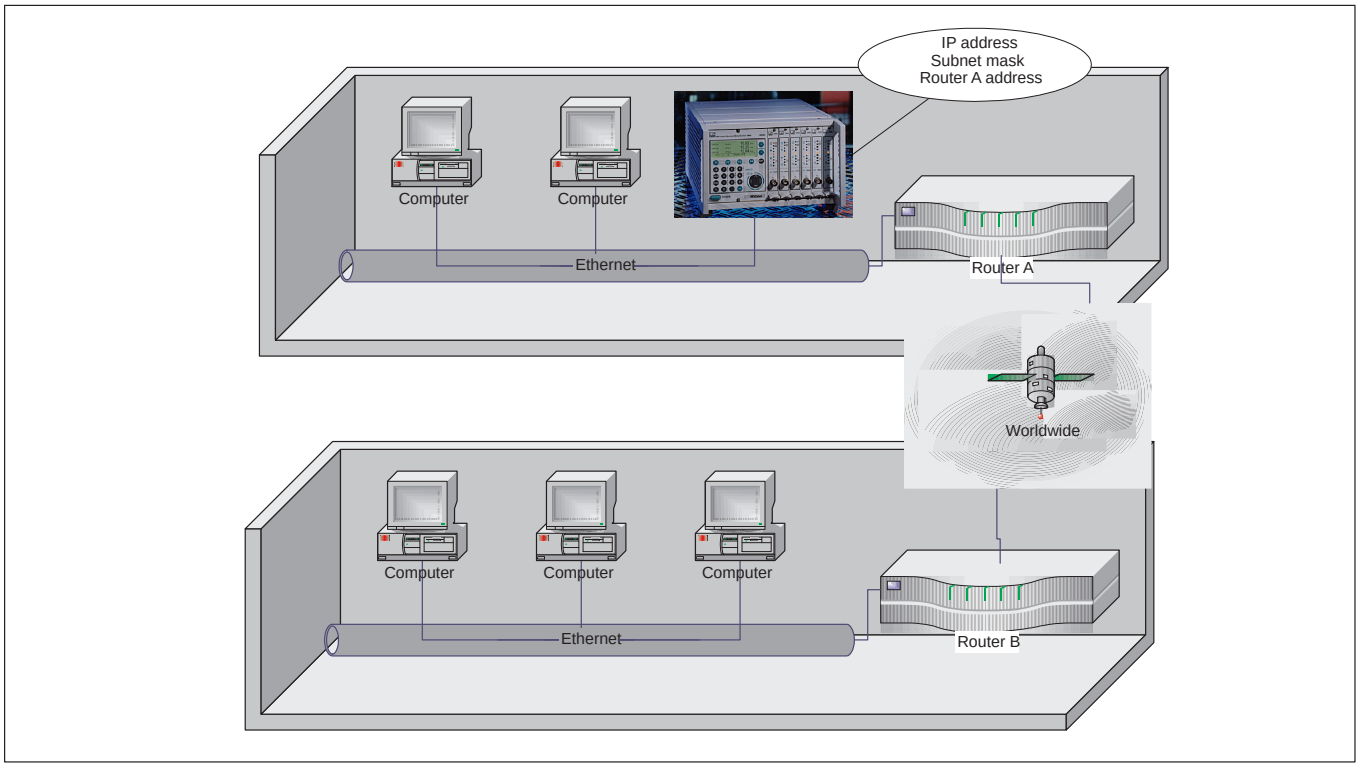

If data packets are sent via node points, for example from the company computer to the Internet or a WAN / LAN, routers are needed to distribute the data packets in different directions based on their address.

Routers are computers designed especially for this purpose that are equipped with their own operating system. They have the task of analyzing millions of IP packets, reading their headers and then forwarding them on in the right direction.

Display and control panel (AB) in computer mode

The display and control panel can be either disabled (factory settings) or active while the computer is in operation. When its status is disabled, only the status information and measured values are updated.

10.4.1 Port usage

Certain Ethernet ports must be shared for communication between PC and CP.

The following TCP ports must be shared for CP52:

- Port 7 for communication with the device
- Port 80 for the web server and firmware updates

The following UDP ports must also be shared to be able to find CP52 with the HBM Device Manager or change interface settings:

- Port 31,416 to find CP52
- Port 31,417 to change interface settings using the HBM Device Manager

The following TCP ports must be shared for CP22/42:

- Port 7 for communication with the device
- Port 80 for the web server (CP42 only)

10.4.2 Communication processor and multi—client mode

When a communication processor is delivered from the factory, it is only possible to connect one PC to the MGC*plus* system. If you want to connect several PCs to the MGC*plus* system the "Multi-client" option must be activated. This is done with the "MGC*plus* Assistant" software, in the CP Options dialog box. All interfaces support the multi-client capability of the communication processor. The multi-client option also supports Ethernet access via routers.

In total, up to 4 external clients can access the MGC*plus*. Only one client can be linked to each interface. It is only possible to connect several clients simultaneously via Ethernet (using an Ethernet switch with patch cables, for example).

In addition to the external clients, there are also other internal clients (for example AB22A, ML71B, and ML78), which are always active, regardless of whether the multi-client option has been activated. So it is always possible to record measurement data on a PC card and acquire data on a PC in parallel.

If two or more PCs are to be used with an MGC*plus* it is essential for "MultiClient" to be activated.

While the measured values of one client are being recorded, none of the other clients can make changes to the recording of measured data. External clients can only reset the time channel. All the other measured data recording parameters, such as sampling rate groups, triggers, channel selection, etc., are divided between the client processes.

Notice

But every client can effect changes in the parameterization of every amplifier. For example, should a client change the zero offset or the filter setting of an amplifier, this will immediately have repercussions for the recorded data of another client process. In this case, the recorded measurement traceability information will not match the effective amplifier parameters.

What constraints are there to consider?

The number of measured values that can be generated in an MGC*plus* is limited to 307,200 per second (16 modules at a maximum of 19,200 measured values per second).

Each module in the MGC*plus* system can transmit no more than 19,200 measured values per second to the external interfaces. If one client request net values, for example, and another gross values, this may cause "link resource conflicts", which can be cleared by HBM software. Other manufacturers' software can perhaps not resolve these "link resource conflicts" automatically.

The communication processor has an internal ring buffer where measured values can be stored temporarily if external users delay collection. In multi-client mode, the various external clients must share this internal buffer. HBM catman software (catman Easy/AP and catman enterprise) can be used to view utilization of the buffer and data acquisition performance.

It is not possible to specify absolute rates for measured value transmission over the individual system interfaces, as external influences (PC and software performance) must be taken into account.

10.5 Language

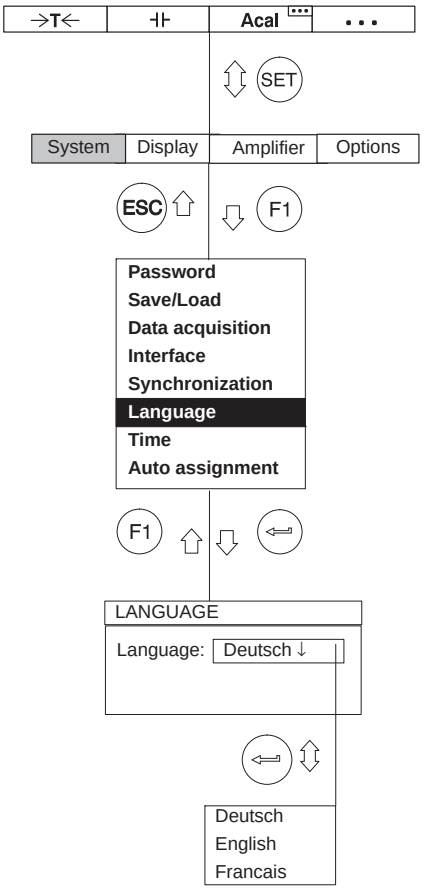

You can use this function to select the language in the display, menu and texts.

10.6 Time

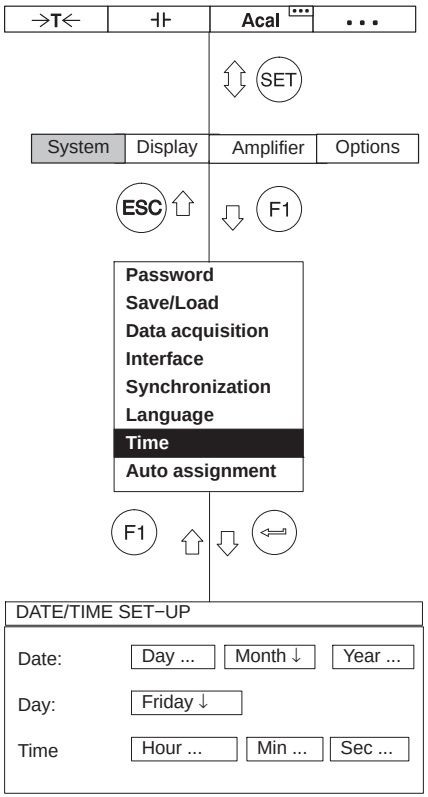

You can use this function to set the date, day of the week and time.

11 MENU STRUCTURE

The menu structure shown below will help you find the required setting menus more rapidly. The necessary key sequence is also shown here.

Structural elements

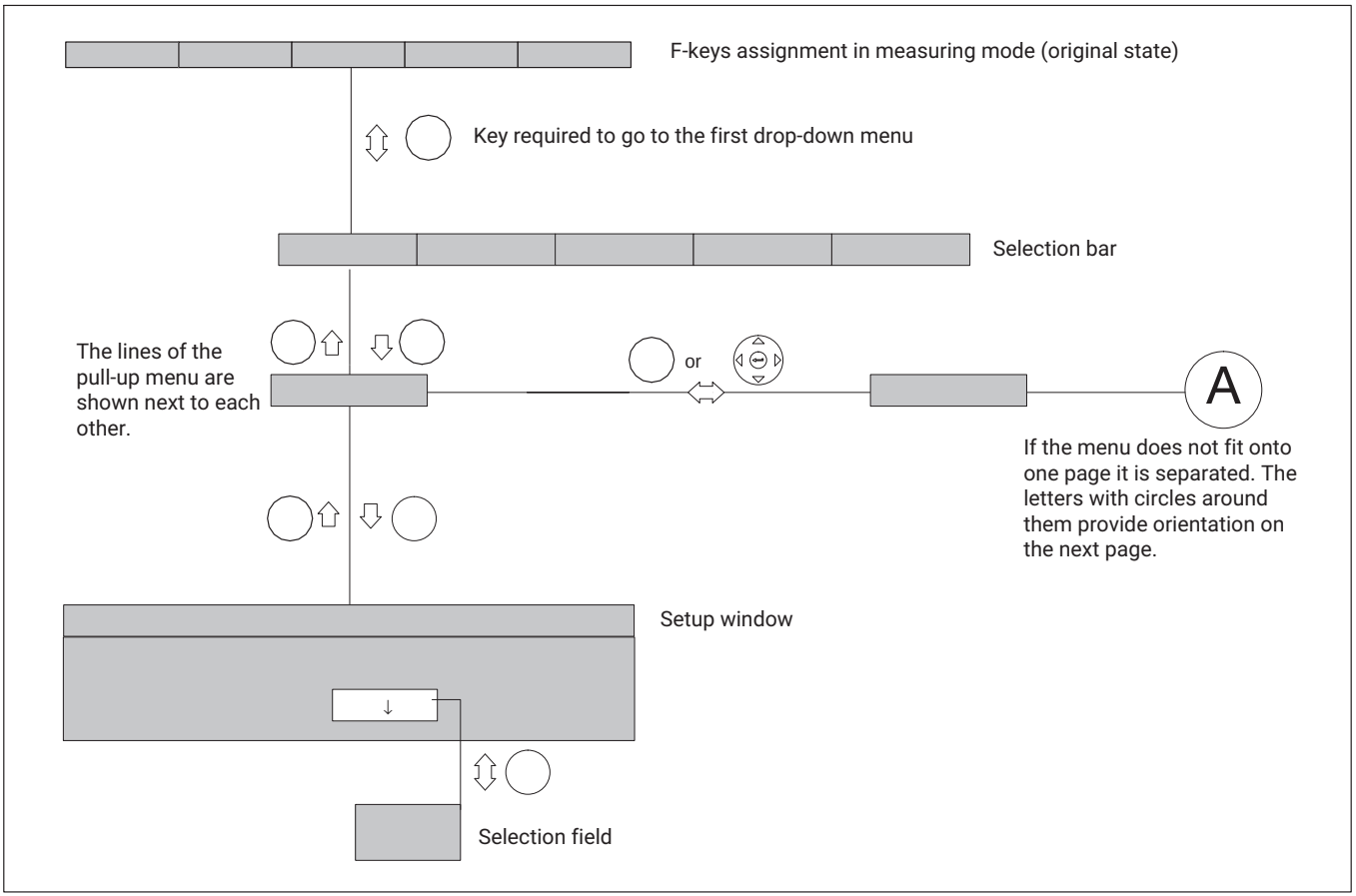

Symbols

mV/V ↓	Selection field
0.000000...	Edit field
measure	Button (triggers action)
measure ...	Button (opens new setup window)
√ √√√ √√	Activation fields
	Cursor keys
	Direction arrows, pointing in the working direction of the keys

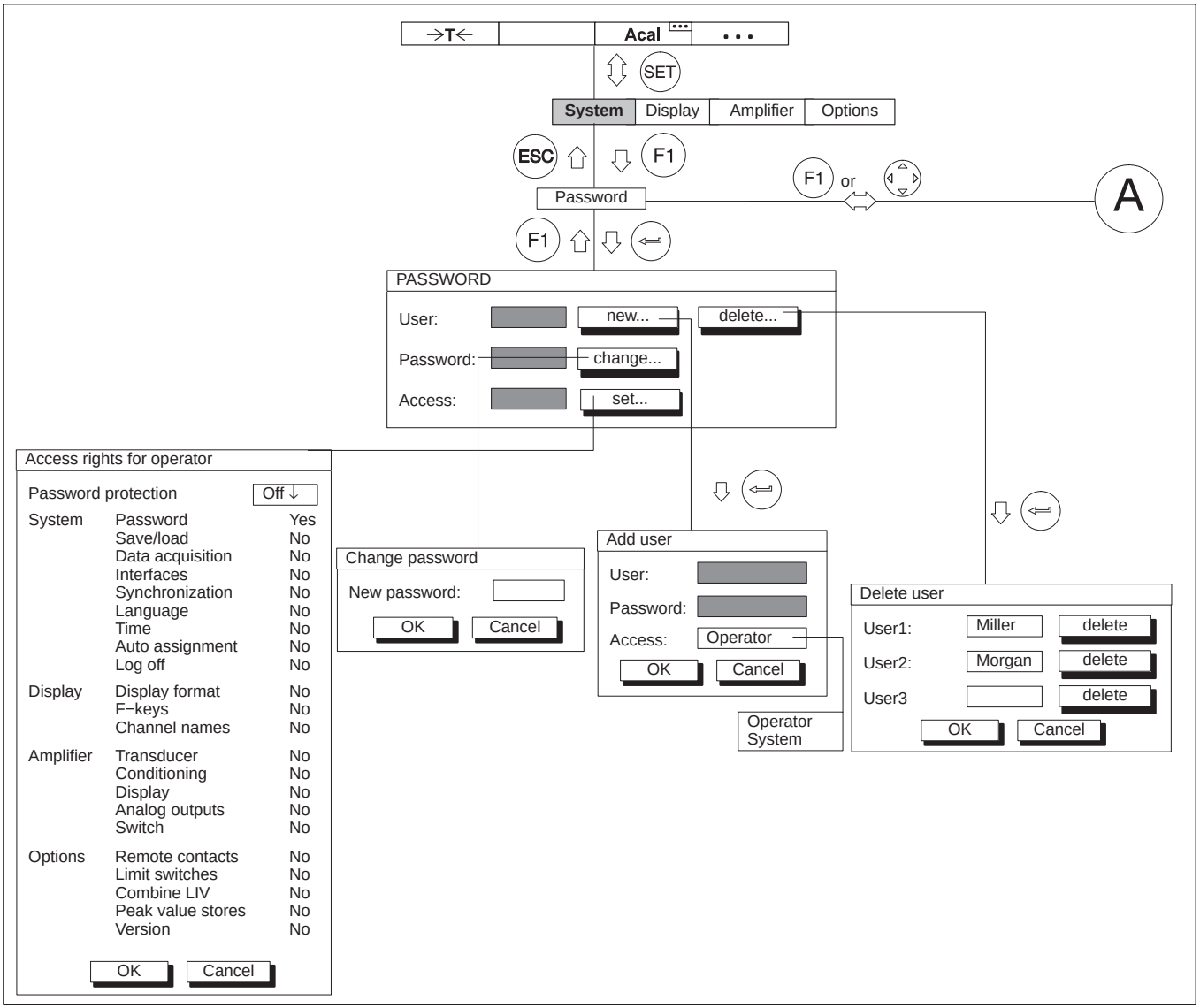
→T←
Acal
SET
System
Display
Amplifier
Options
ESC
F1
F1
or
Password
A
F1
PASSWORD
User:
new...
delete...
Password:
change...
Access:
set...
Access rights for operator
Password protection
Off
System
Password
Yes
Save/load
No
Data acquisition
No
Interfaces
No
Synchronization
No
Language
No
Time
No
Auto assignment
No
Log off
No
Display
Display format
No
F−keys
No
Channel names
No
Amplifier
Transducer
No
Conditioning
No
Display
No
Analog outputs
No
Switch
No
Options
Remote contacts
No
Limit switches
No
Combine LIV
No
Peak value stores
No
Version
No
OK
Cancel
Change password
New password:
OK
Cancel
Add user
User:
Password:
Access:
Operator
OK
Cancel
Operator
System
Delete user
User1:
Miller
delete
User2:
Morgan
delete
User3
delete
OK
Cancel

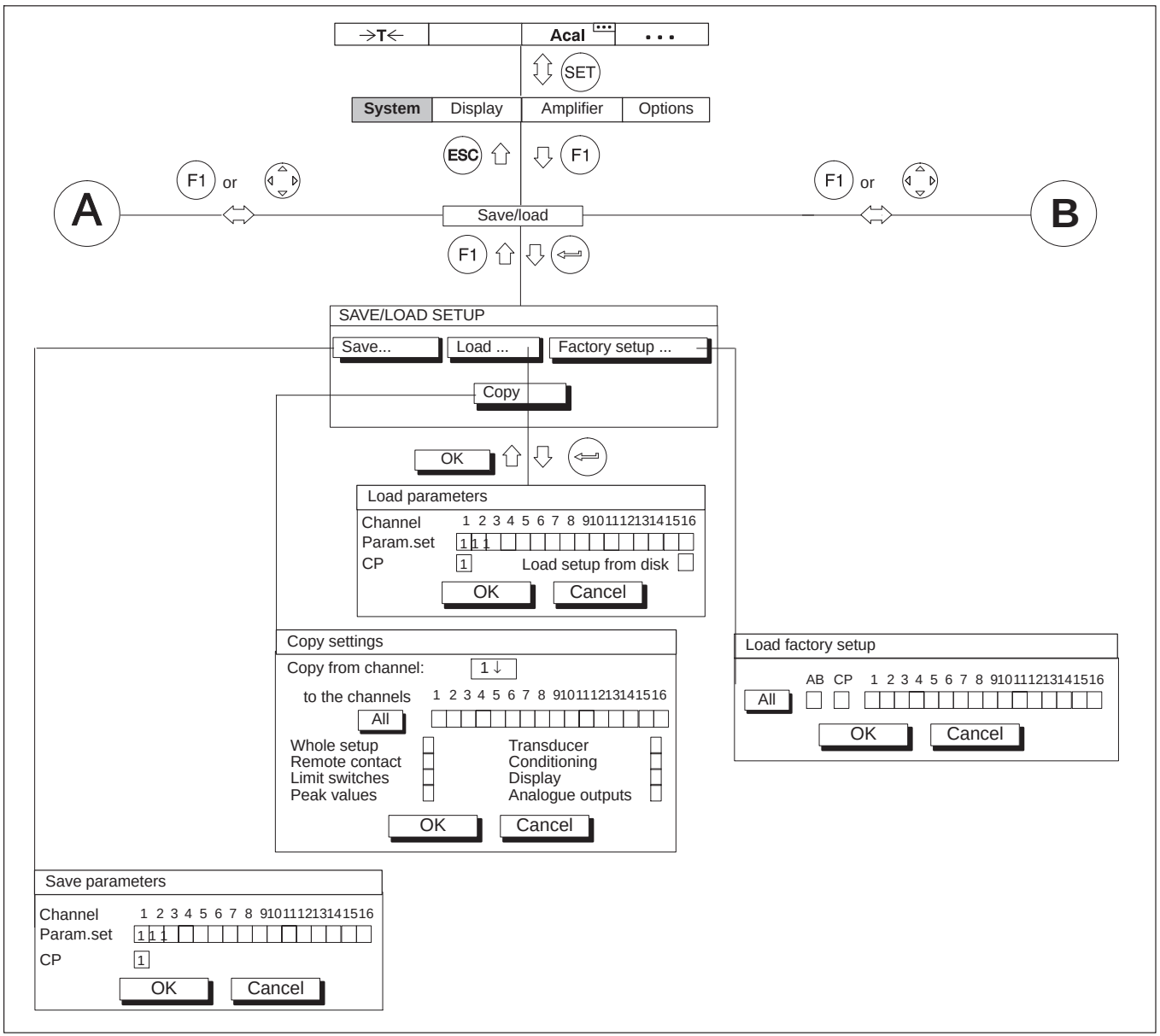
→T←
Acal
• • •
SET
System
Display
Amplifier
Options
ESC
F1
F1 or
A
B
Save/load
SAVE/LOAD SETUP
Save...
Load ...
Factory setup ...
Copy
OK
Load parameters
Channel 1 2 3 4 5 6 7 8 9101112131415 16
Param.set
CP
Load setup from disk
OK
Cancel
Copy settings
Copy from channel:
to the channels
All
Whole setup
Remote contact
Limit switches
Peak values
Transducer
Conditioning
Display
Analogue outputs
OK
Cancel
Load factory setup
AB CP
All
OK
Cancel
Save parameters
Channel 1 2 3 4 5 6 7 8 9101112131415 16
Param.set
CP
OK
Cancel

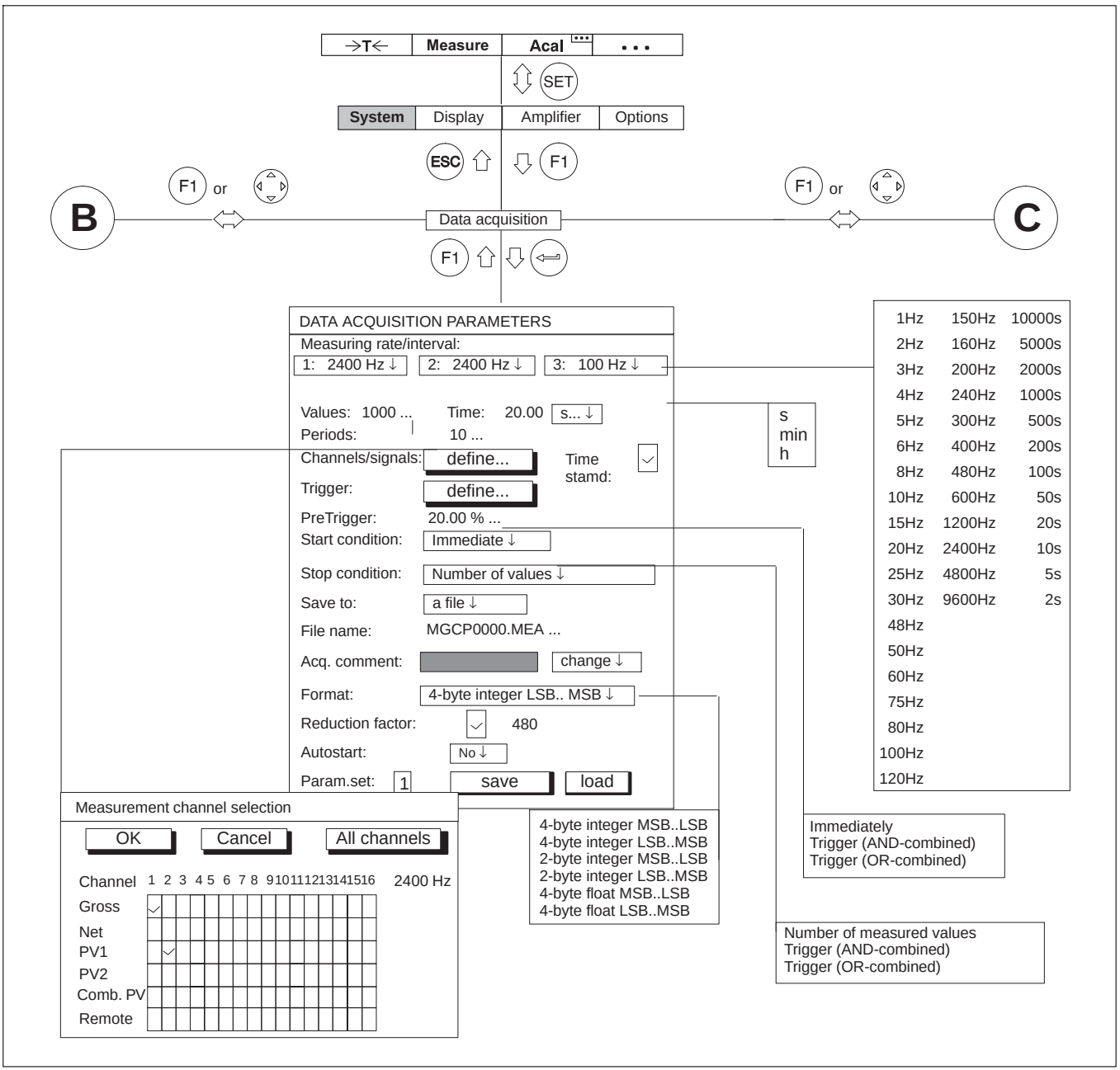
→T←
Measure
Acal
• • •
SET
System
Display
Amplifier
Options
ESC
F1
F1 or
B
C
Data acquisition
DATA ACQUISITION PARAMETERS
Measuring rate/interval:
1: 2400 Hz ↓
2: 2400 Hz ↓
3: 100 Hz ↓
Values: 1000 ...
Time: 20.00
s... ↓
Periods: 10 ...
Channels/signals:
define...
Time stamd:
Trigger:
define...
PreTrigger: 20.00 % ...
Start condition: Immediate ↓
Stop condition: Number of values ↓
Save to: a file ↓
File name: MGCP0000.MEA ...
Acq. comment:
change ↓
Format: 4-byte integer LSB.. MSB ↓
Reduction factor: 480
Autostart: No ↓
Param.set: 1
save
load
s
min
h
1Hz 150Hz 10000s
2Hz 160Hz 5000s
3Hz 200Hz 2000s
4Hz 240Hz 1000s
5Hz 300Hz 500s
6Hz 400Hz 200s
8Hz 480Hz 100s
10Hz 600Hz 50s
15Hz 1200Hz 20s
20Hz 2400Hz 10s
25Hz 4800Hz 5s
30Hz 9600Hz 2s
48Hz
50Hz
60Hz
75Hz
80Hz
100Hz
120Hz
4-byte integer MSB..LSB
4-byte integer LSB..MSB
2-byte integer MSB..LSB
2-byte integer LSB..MSB
4-byte float MSB..LSB
4-byte float LSB..MSB
Immediately
Trigger (AND-combined)
Trigger (OR-combined)
Number of measured values
Trigger (AND-combined)
Trigger (OR-combined)
Measurement channel selection
OK
Cancel
All channels
Channel 1 2 3 4 5 6 7 8 9 10 11 12 13 14 15 16
2400 Hz
Gross
Net
PV1
PV2
Comb. PV
Remote

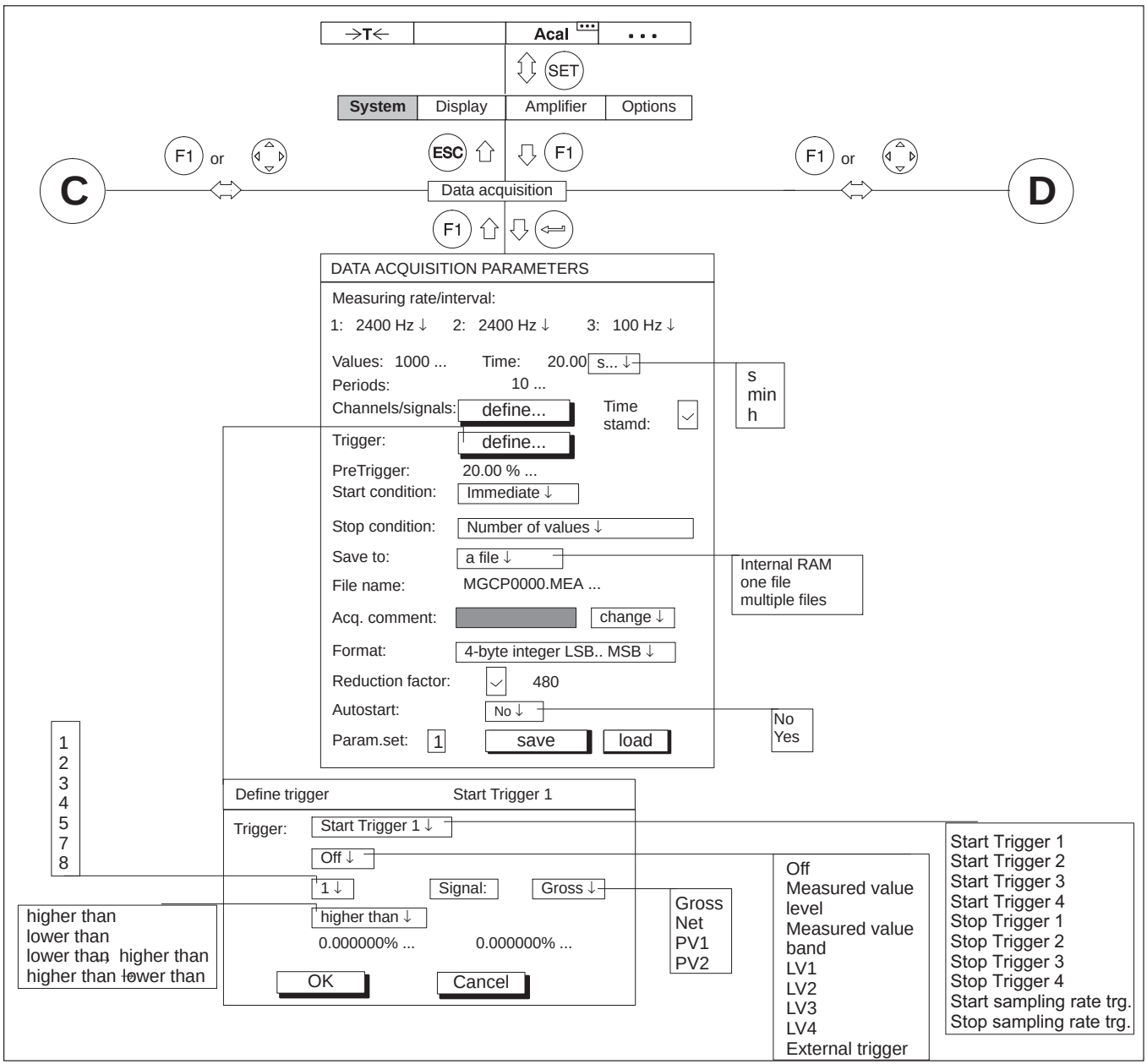
→T←
Acal
• • •
SET
System
Display
Amplifier
Options
F1 or
ESC
F1
F1 or
C
Data acquisition
D
F1
DATA ACQUISITION PARAMETERS
Measuring rate/interval:
1: 2400 Hz ↓ 2: 2400 Hz ↓ 3: 100 Hz ↓
Values: 1000 ... Time: 20.00 s... ↓
Periods: 10 ...
Channels/signals: define... Time stamd:
Trigger: define...
PreTrigger: 20.00 % ...
Start condition: Immediate ↓
Stop condition: Number of values ↓
Save to: a file ↓
File name: MGCP0000.MEA ...
Acq. comment: change ↓
Format: 4-byte integer LSB.. MSB ↓
Reduction factor: 480
Autostart: No ↓
Param.set: 1 save load
s
min
h
Internal RAM
one file
multiple files
No
Yes
1
2
3
4
5
7
8
Define trigger Start Trigger 1
Trigger: Start Trigger 1 ↓
Off ↓
1 ↓ Signal: Gross ↓
higher than ↓
0.000000% ... 0.000000% ...
OK Cancel
higher than
lower than
lower than higher than
higher than lower than
Gross
Net
PV1
PV2
Off
Measured value level
Measured value band
LV1
LV2
LV3
LV4
External trigger
Start Trigger 1
Start Trigger 2
Start Trigger 3
Start Trigger 4
Stop Trigger 1
Stop Trigger 2
Stop Trigger 3
Stop Trigger 4
Start sampling rate trg.
Stop sampling rate trg.

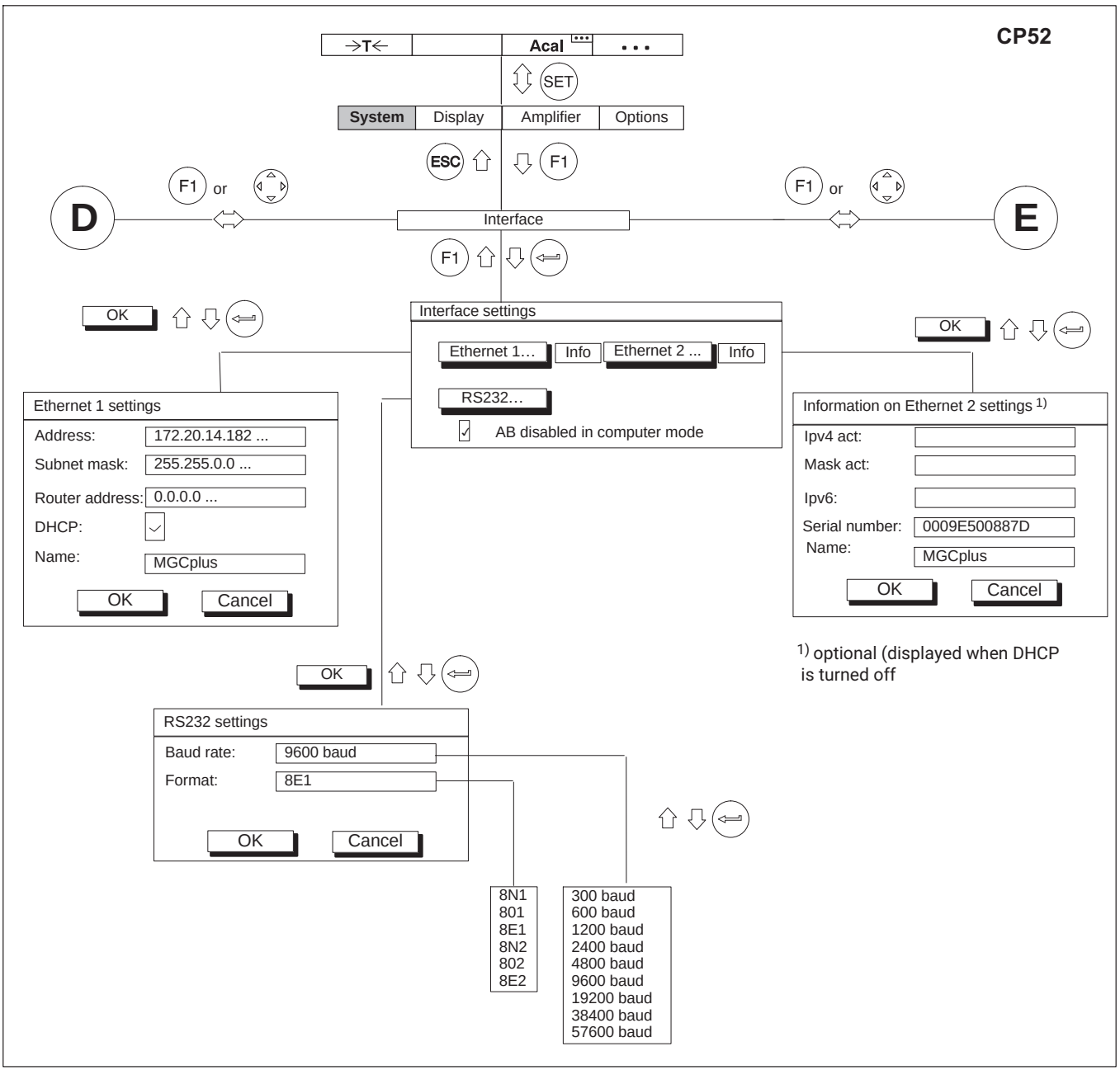
CP52
→T←
Acal
SET
System
Display
Amplifier
Options
ESC
F1
F1 or
D
E
Interface
OK
Interface settings
Ethernet 1…
Info
Ethernet 2 ...
Info
RS232…
AB disabled in computer mode
Ethernet 1 settings
Address:
172.20.14.182 ...
Subnet mask:
255.255.0.0 ...
Router address:
0.0.0.0 ...
DHCP:
Name:
MGCplus
OK
Cancel
Information on Ethernet 2 settings 1)
Ipv4 act:
Mask act:
Ipv6:
Serial number:
0009E500887D
Name:
MGCplus
OK
Cancel
1) optional (displayed when DHCP is turned off
RS232 settings
Baud rate:
9600 baud
Format:
8E1
OK
Cancel
8N1
801
8E1
8N2
802
8E2
300 baud
600 baud
1200 baud
2400 baud
4800 baud
9600 baud
19200 baud
38400 baud
57600 baud

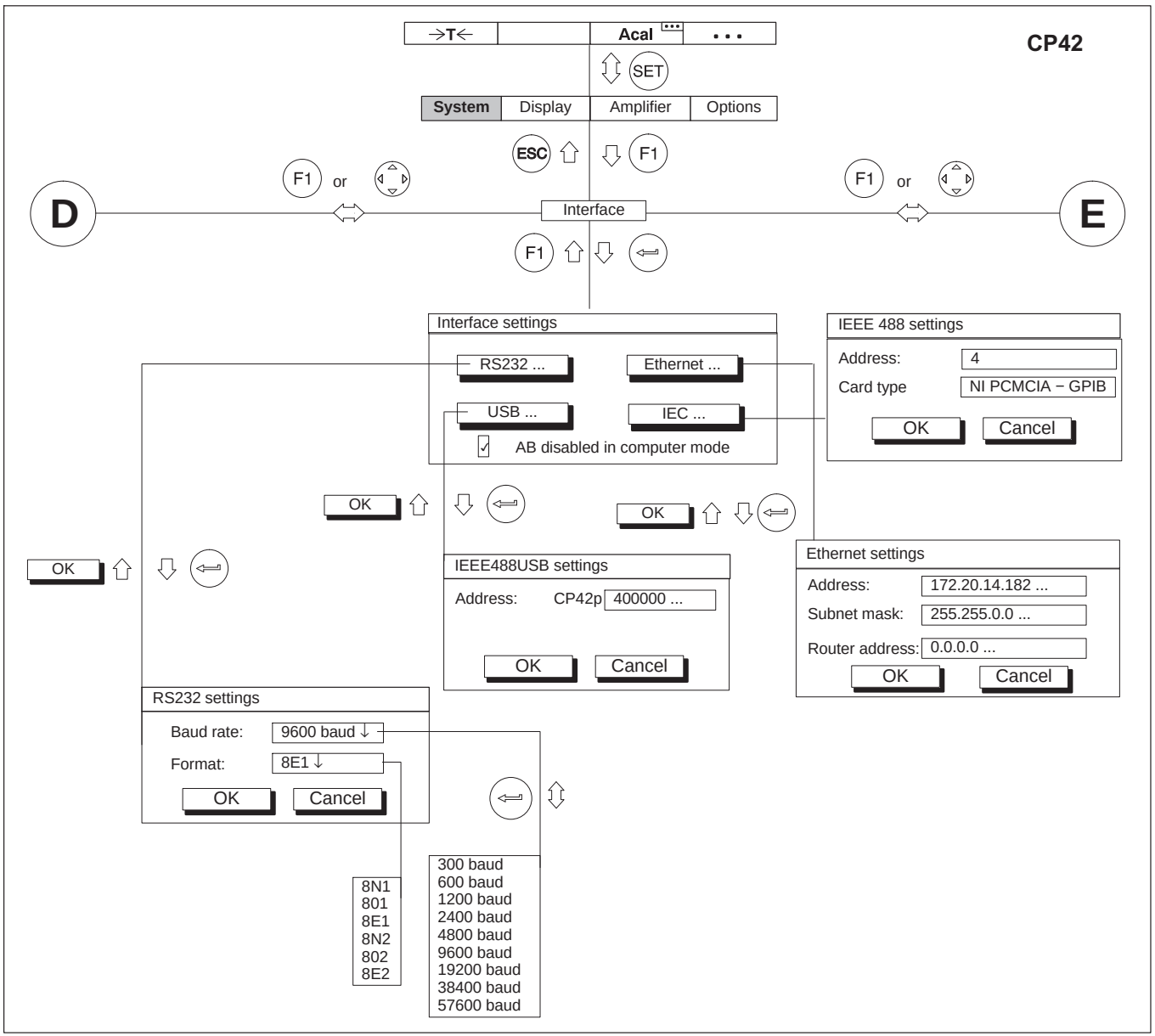
CP42
→T←
Acal
SET
System
Display
Amplifier
Options
ESC
F1
or
D
E
Interface
Interface settings
RS232 ...
Ethernet ...
USB ...
IEC ...
AB disabled in computer mode
IEEE 488 settings
Address: 4
Card type NI PCMCIA − GPIB
OK
Cancel
IEEE488USB settings
Address: CP42p 400000 ...
Ethernet settings
Address: 172.20.14.182 ...
Subnet mask: 255.255.0.0 ...
Router address: 0.0.0.0 ...
RS232 settings
Baud rate: 9600 baud
Format: 8E1
8N1
801
8E1
8N2
802
8E2
300 baud
600 baud
1200 baud
2400 baud
4800 baud
9600 baud
19200 baud
38400 baud
57600 baud

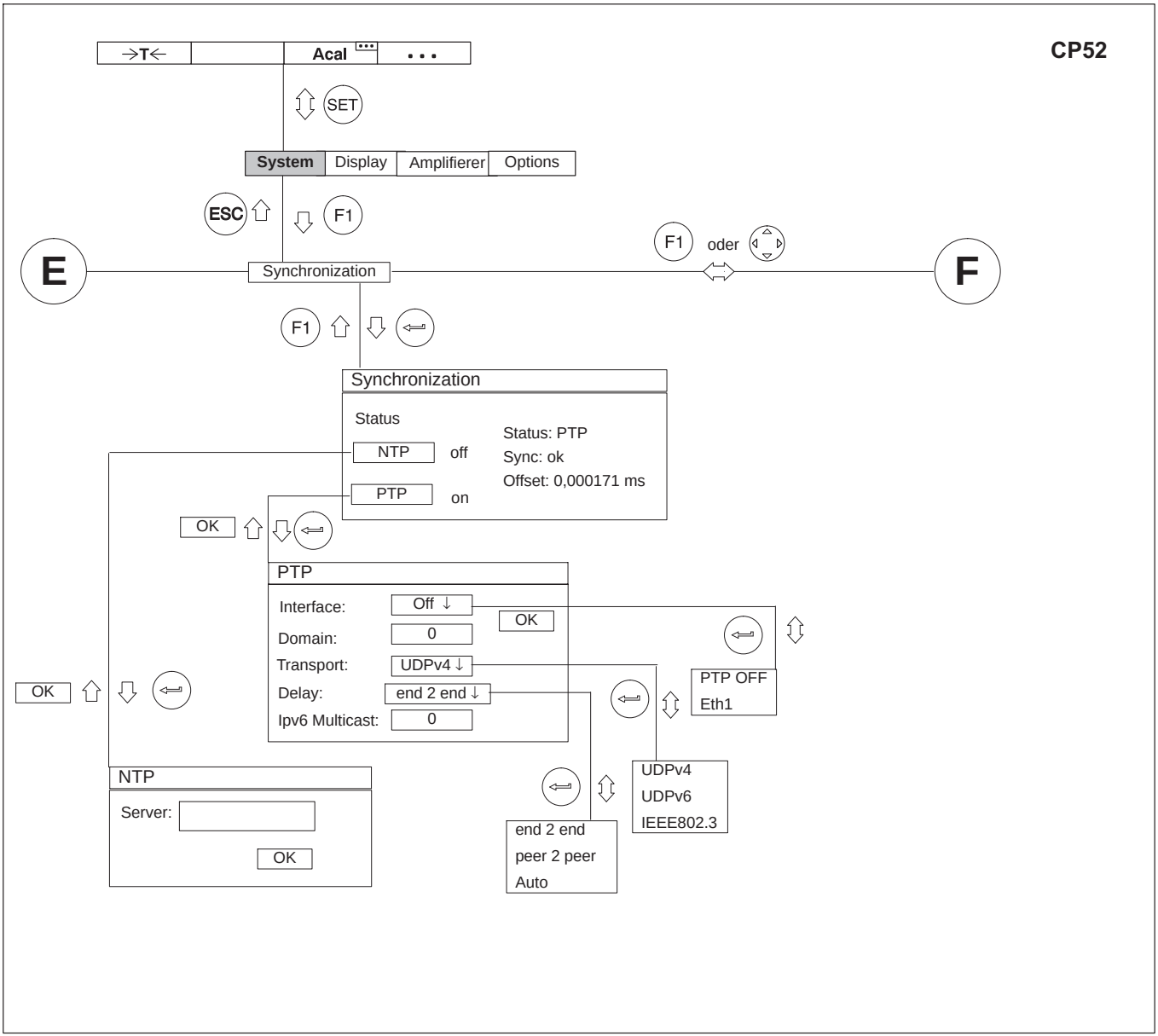
CP52
→T←
Acal
• • •
SET
System
Display
Amplifierer
Options
ESC
F1
E
Synchronization
F1
oder
F
F1
Synchronization
Status
NTP
off
PTP
on
Status: PTP
Sync: ok
Offset: 0,000171 ms
OK
PTP
Interface:
Off ↓
Domain:
0
Transport:
UDPv4 ↓
Delay:
end 2 end ↓
Ipv6 Multicast:
0
OK
OK
PTP OFF
Eth1
NTP
Server:
OK
UDPv4
UDPv6
IEEE802.3
end 2 end
peer 2 peer
Auto

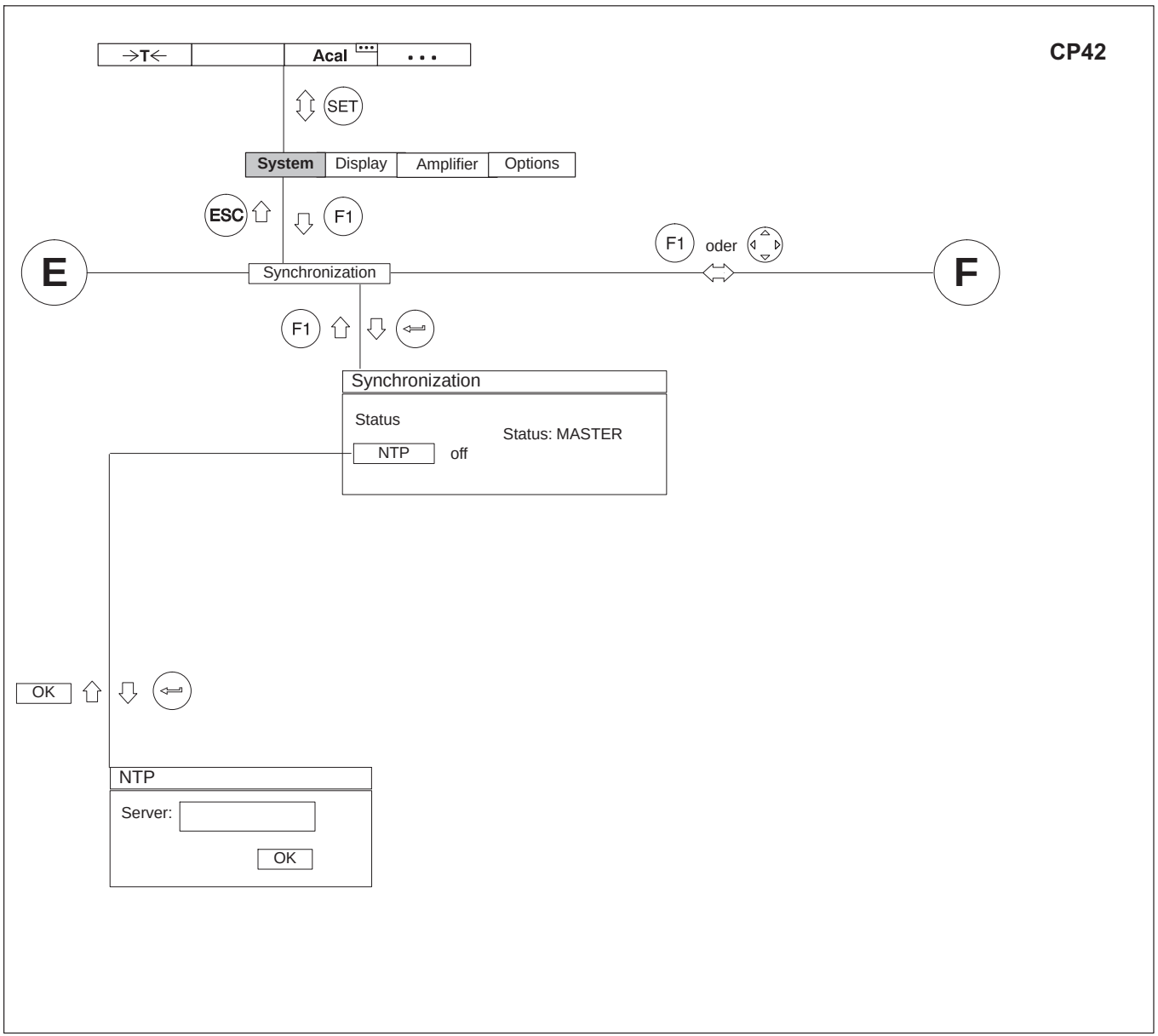
CP42
→T←
Acal
• • •
SET
System
Display
Amplifier
Options
ESC
F1
E
F1
oder
F
Synchronization
F1
Synchronization
Status
Status: MASTER
NTP
off
OK
NTP
Server:
OK

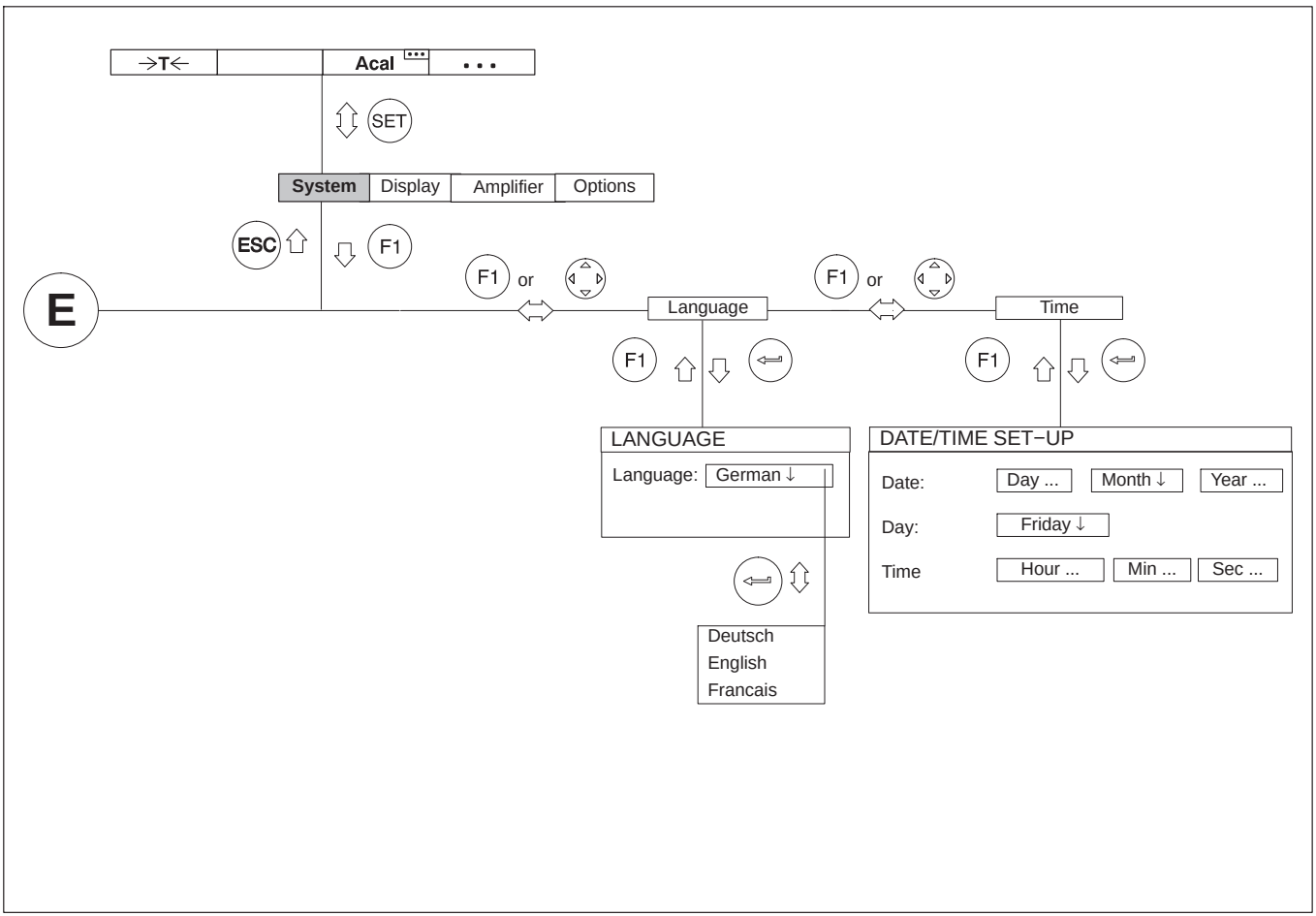
→T←
Acal
• • •
SET
System
Display
Amplifier
Options
ESC
F1
E
F1
or
Language
F1
or
Time
F1
F1
LANGUAGE
Language:
German ↓
Deutsch
English
Francais
DATE/TIME SET−UP
Date:
Day ...
Month ↓
Year ...
Day:
Friday ↓
Time
Hour ...
Min ...
Sec ...

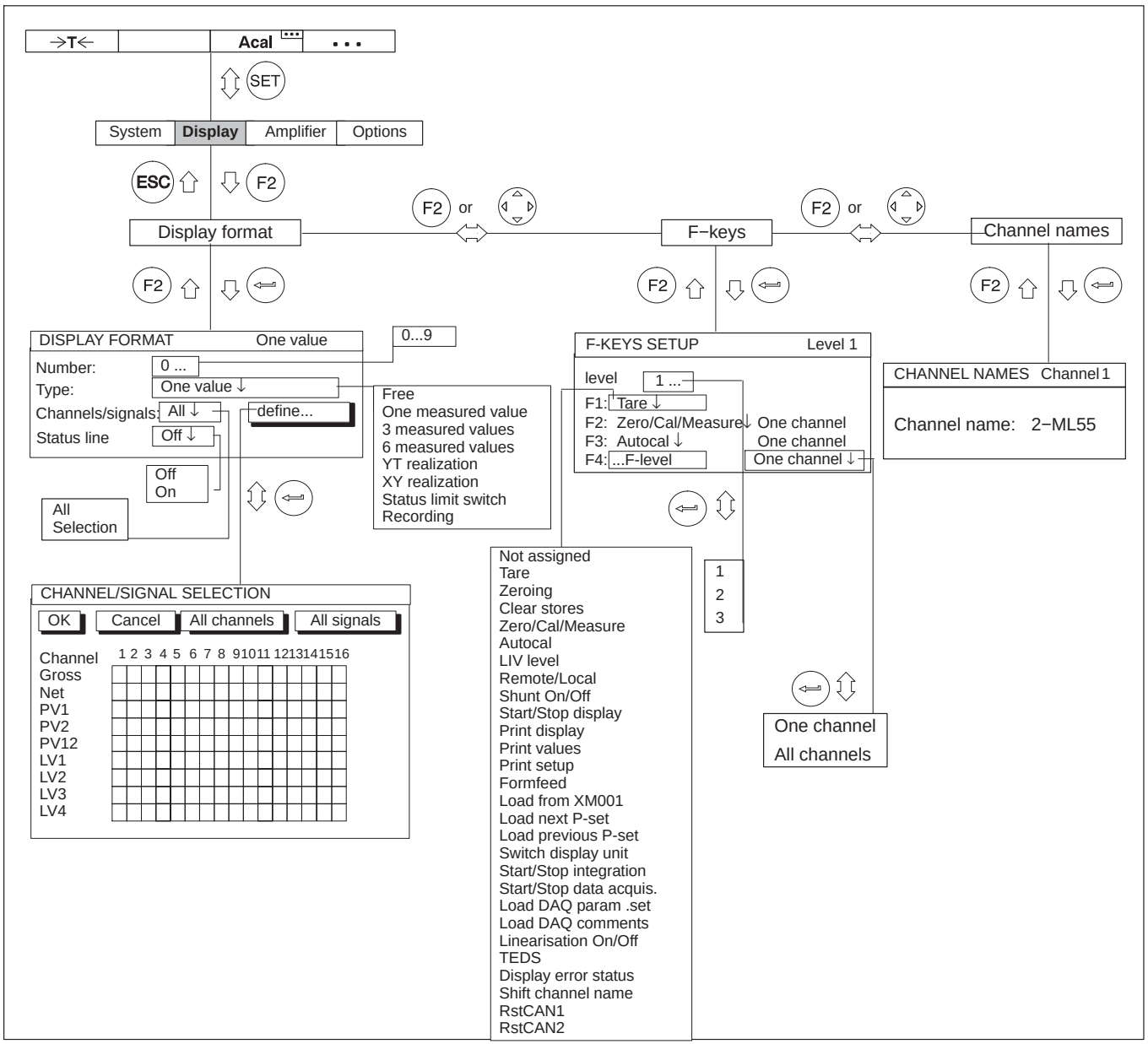
→T←
Acal
SET
System
Display
Amplifier
Options
ESC
F2
or
Display format
F−keys
Channel names
DISPLAY FORMAT
One value
Number:
0 ...
Type:
One value ↓
Channels/signals:
All ↓
define...
Status line
Off ↓
0...9
Free
One measured value
3 measured values
6 measured values
YT realization
XY realization
Status limit switch
Recording
Off
On
All
Selection
CHANNEL/SIGNAL SELECTION
OK
Cancel
All channels
All signals
Channel
Gross
Net
PV1
PV2
PV12
LV1
LV2
LV3
LV4
1 2 3 4 5 6 7 8 9 10 11 12 13 14 15 16
F-KEYS SETUP
Level 1
level
1 ...
F1: Tare ↓
F2: Zero/Cal/Measure ↓
F3: Autocal ↓
F4: ...F-level
One channel
One channel
One channel ↓
Not assigned
Tare
Zeroing
Clear stores
Zero/Cal/Measure
Autocal
LIV level
Remote/Local
Shunt On/Off
Start/Stop display
Print display
Print values
Print setup
Formfeed
Load from XM001
Load next P-set
Load previous P-set
Switch display unit
Start/Stop integration
Start/Stop data acquis.
Load DAQ param .set
Load DAQ comments
Linearisation On/Off
TEDS
Display error status
Shift channel name
RstCAN1
RstCAN2
1
2
3
One channel
All channels
CHANNEL NAMES
Channel 1
Channel name: 2−ML55

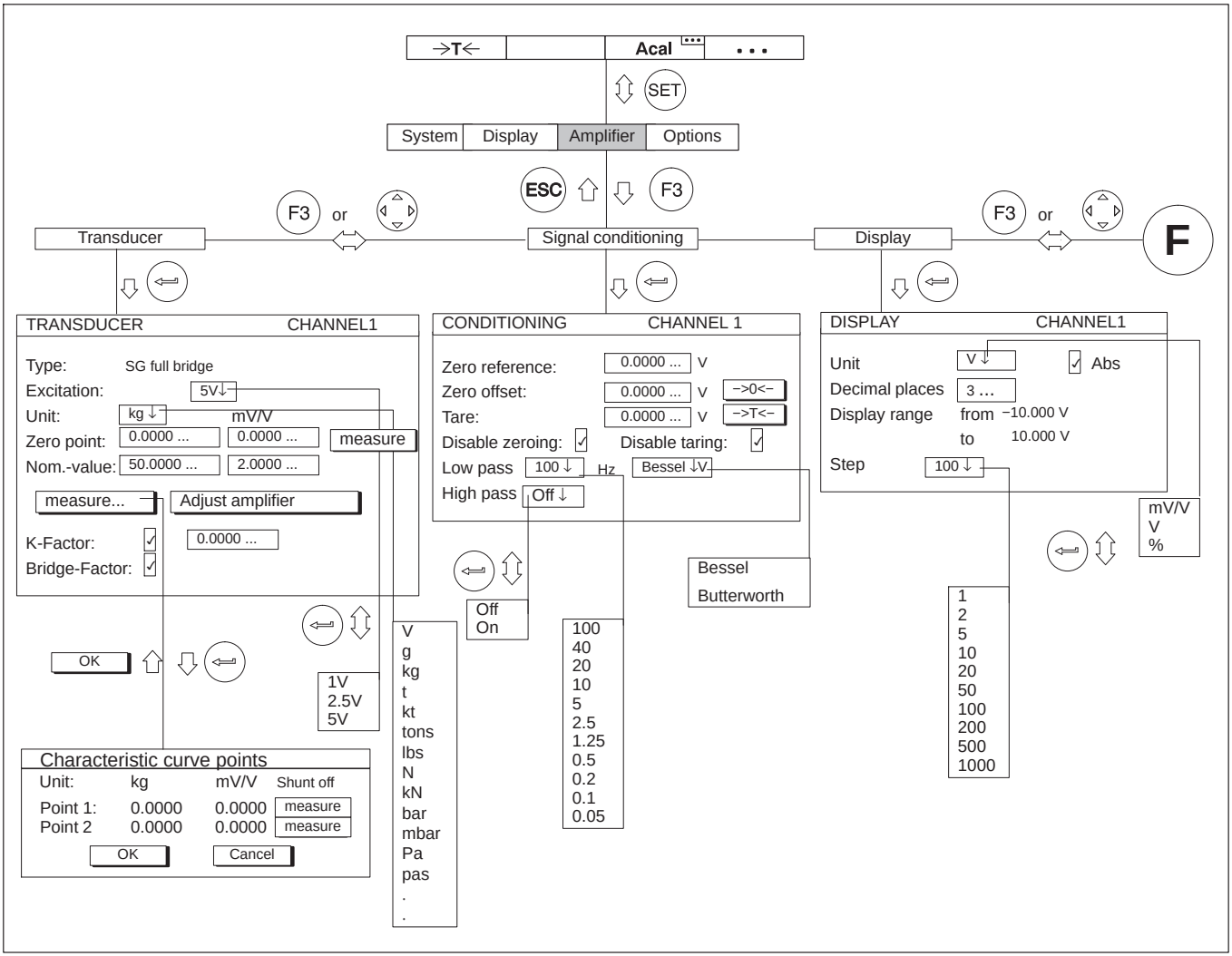
→T←
Acal
• • •
SET
System
Display
Amplifier
Options
ESC
F3
or
Transducer
Signal conditioning
Display
F
TRANSDUCER CHANNEL1
Type: SG full bridge
Excitation: 5V
Unit: kg
mV/V
Zero point: 0.0000 ... 0.0000 ...
measure
Nom.-value: 50.0000 ... 2.0000 ...
measure...
Adjust amplifier
K-Factor:
Bridge-Factor:
0.0000 ...
OK
1V
2.5V
5V
Characteristic curve points
Unit: kg mV/V Shunt off
Point 1: 0.0000 0.0000 measure
Point 2 0.0000 0.0000 measure
OK
Cancel
V
g
kg
t
kt
tons
lbs
N
kN
bar
mbar
Pa
pas
. .
CONDITIONING CHANNEL 1
Zero reference: 0.0000 ... V
Zero offset: 0.0000 ... V ->0<-
Tare: 0.0000 ... V ->T<-
Disable zeroing:
Disable taring:
Low pass 100 Hz Bessel V
High pass Off
Off
On
100
40
20
10
5
2.5
1.25
0.5
0.2
0.1
0.05
Bessel
Butterworth
DISPLAY CHANNEL1
Unit V
Abs
Decimal places 3 ...
Display range from −10.000 V
to 10.000 V
Step 100
mV/V
V
%
1
2
5
10
20
50
100
200
500
1000

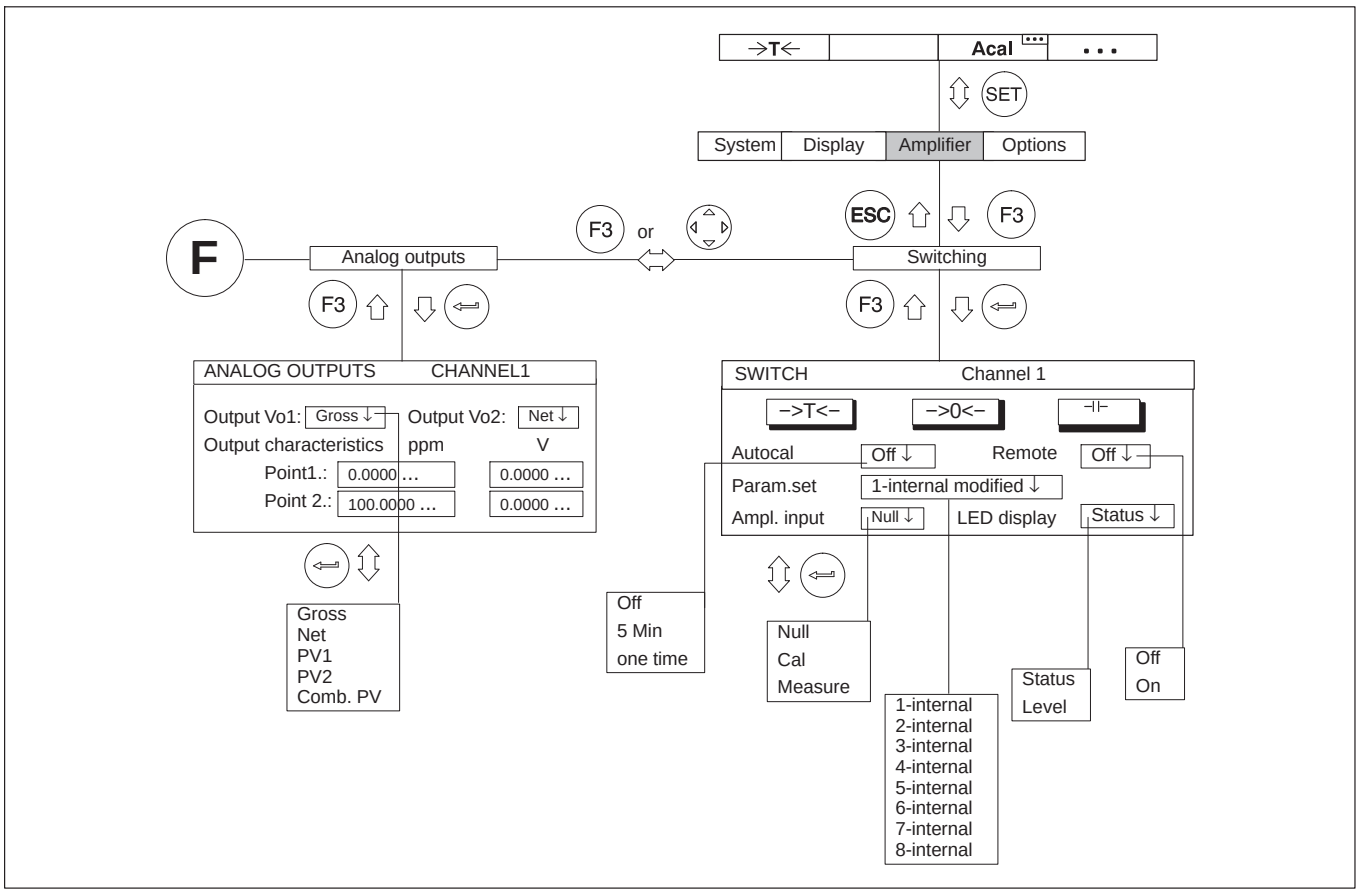
→T←
Acal
• • •
SET
System
Display
Amplifier
Options
F
F3
or
ESC
F3
Analog outputs
Switching
F3
F3
ANALOG OUTPUTS
CHANNEL1
Output Vo1:
Gross
Output Vo2:
Net
Output characteristics
ppm
V
Point1.:
0.0000 …
0.0000 …
Point 2.:
100.0000 …
0.0000 …
Gross
Net
PV1
PV2
Comb. PV
SWITCH
Channel 1
–>T<–
–>0<–
Autocal
Off
Remote
Off
Param.set
1-internal modified
Ampl. input
Null
LED display
Status
Off
5 Min
one time
Null
Cal
Measure
1-internal
2-internal
3-internal
4-internal
5-internal
6-internal
7-internal
8-internal
Status
Level
Off
On

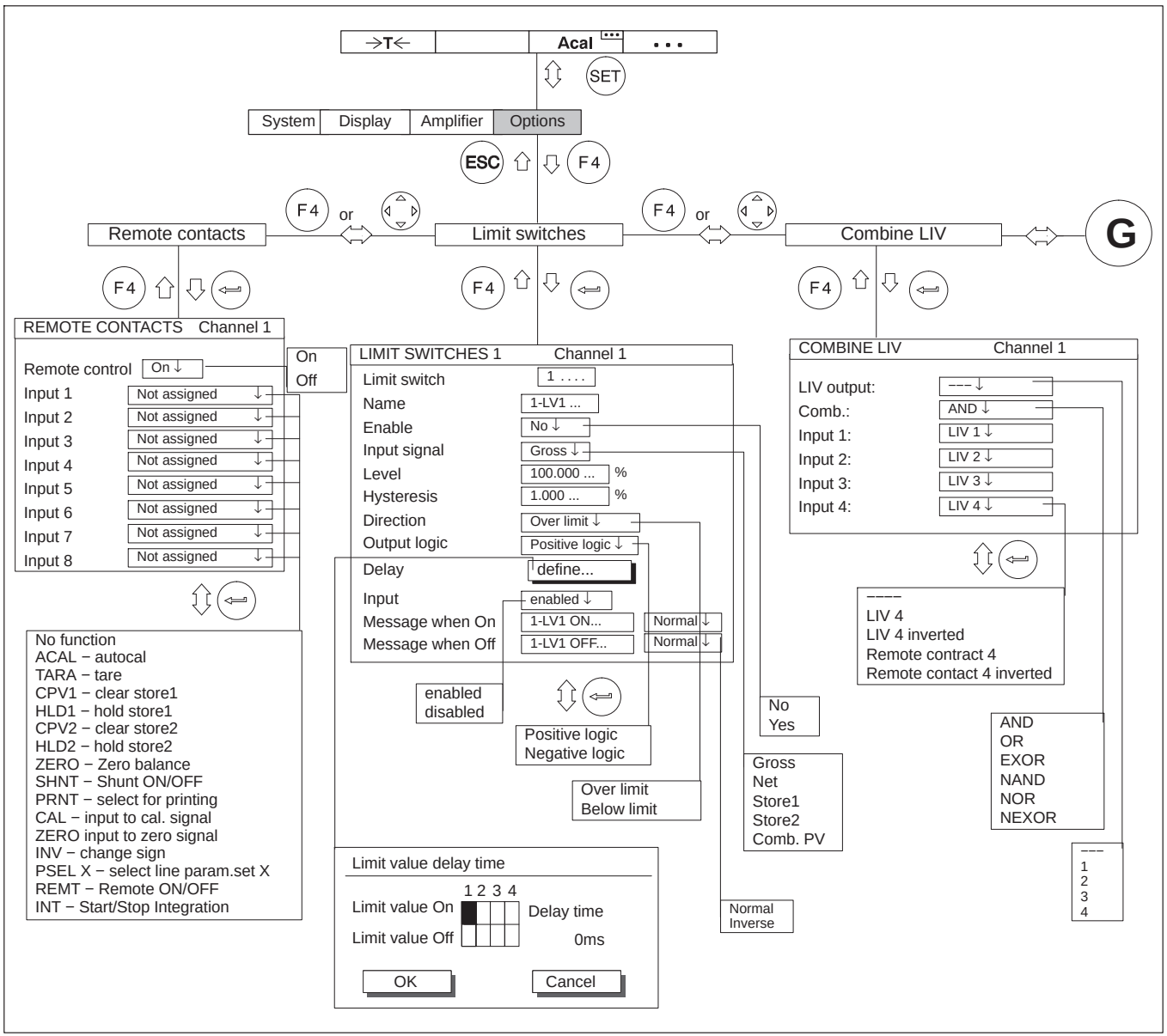
→T←
Acal
SET
System
Display
Amplifier
Options
ESC
F4
or
Remote contacts
Limit switches
Combine LIV
G
REMOTE CONTACTS Channel 1
Remote control
On
Input 1
Input 2
Input 3
Input 4
Input 5
Input 6
Input 7
Input 8
Not assigned
On
Off
No function
ACAL − autocal
TARA − tare
CPV1 − clear store1
HLD1 − hold store1
CPV2 − clear store2
HLD2 − hold store2
ZERO − Zero balance
SHNT − Shunt ON/OFF
PRNT − select for printing
CAL − input to cal. signal
ZERO input to zero signal
INV − change sign
PSEL X − select line param.set X
REMT − Remote ON/OFF
INT − Start/Stop Integration
LIMIT SWITCHES 1 Channel 1
Limit switch
1 . . . .
Name
1-LV1 ...
Enable
No
Input signal
Gross
Level
100.000 ...
%
Hysteresis
1.000 ...
%
Direction
Over limit
Output logic
Positive logic
Delay
define...
Input
enabled
Message when On
1-LV1 ON...
Normal
Message when Off
1-LV1 OFF...
Normal
enabled
disabled
Positive logic
Negative logic
Over limit
Below limit
No
Yes
Gross
Net
Store1
Store2
Comb. PV
Normal
Inverse
Limit value delay time
1 2 3 4
Limit value On
Limit value Off
Delay time
0ms
OK
Cancel
COMBINE LIV Channel 1
LIV output:
Comb.:
AND
Input 1:
LIV 1
Input 2:
LIV 2
Input 3:
LIV 3
Input 4:
LIV 4
LIV 4
LIV 4 inverted
Remote contract 4
Remote contact 4 inverted
AND
OR
EXOR
NAND
NOR
NEXOR
1
2
3
4

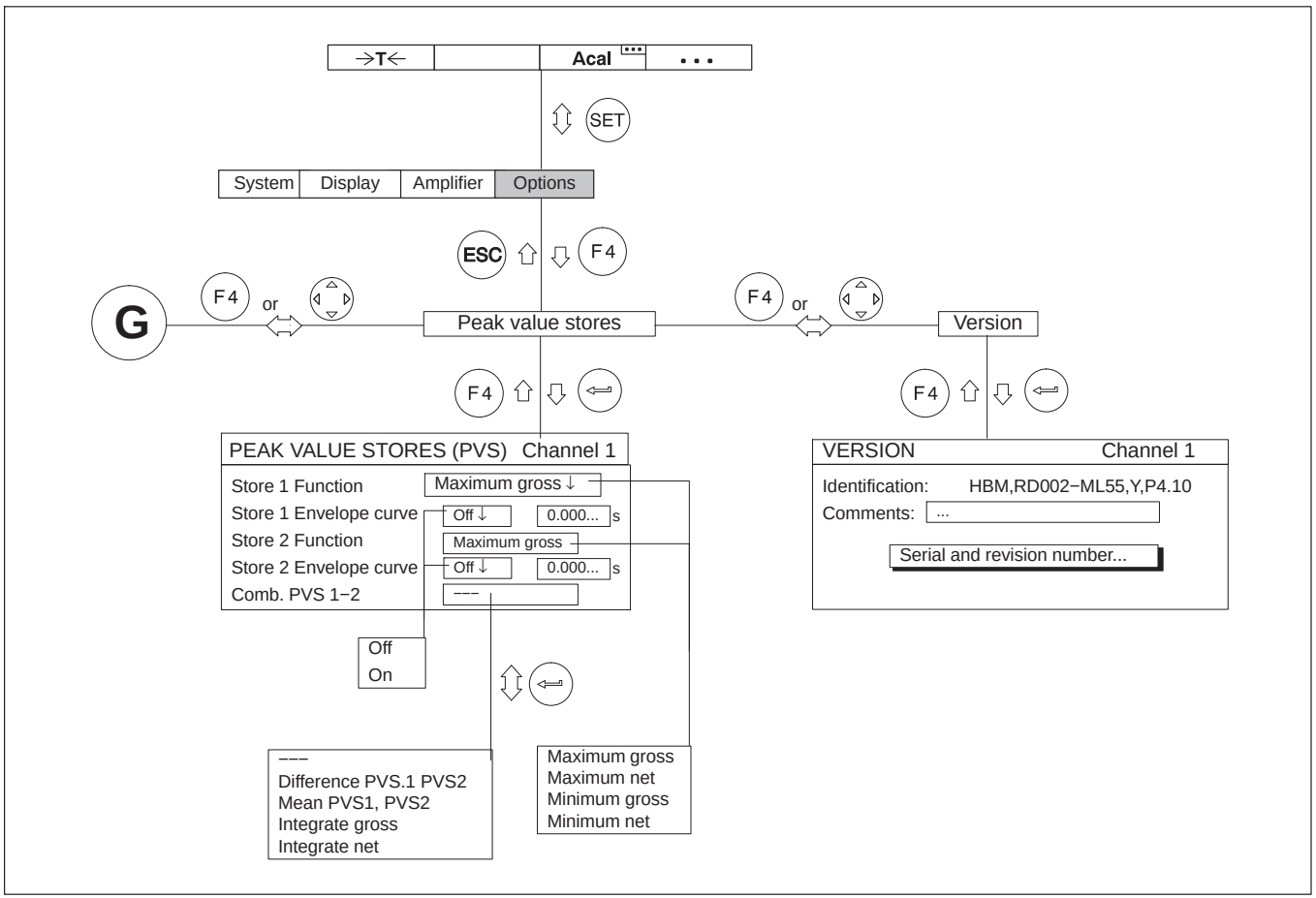
→T←
Acal
• • •
SET
System
Display
Amplifier
Options
ESC
F4
G
F4
or
Peak value stores
F4
or
Version
F4
F4
PEAK VALUE STORES (PVS) Channel 1
Store 1 Function
Maximum gross ↓
Store 1 Envelope curve
Off ↓
0.000...
s
Store 2 Function
Maximum gross
Store 2 Envelope curve
Off ↓
0.000...
s
Comb. PVS 1−2
−−−
Off
On
−−−
Difference PVS.1 PVS2
Mean PVS1, PVS2
Integrate gross
Integrate net
Maximum gross
Maximum net
Minimum gross
Minimum net
VERSION
Channel 1
Identification:
HBM,RD002−ML55,Y,P4.10
Comments:
...
Serial and revision number...

INDEX

A

AB22A, Control elements, 97

AB22A/AB32
- Display, Measuring mode, 99
- Drop-down menus, 110
- Menus, 106
- Save setting, 109
- Setting mode, 103

Absolute/relative to basic value, 211

Activation fields, 110, 278

Adapting to the transducer
- Current and voltage measurement, 159 - 162
- Inductive transducers, 139
- Piezoresistive transducers, 175 - 178
- Potentiometric transducers, 179 - 182
- Power channel, 158 - 172
- Resistance temperature sensor, 162 - 164
- Resistors, 165 - 168
- Rotational speed, 152 - 159
- Strain gage transducers, 129
- Strain gages, 134

Adjust limit values, 190

Amplifier
- adjust, 116
- First measurement, 127

AUTOCAL, 204

Autostart, 259

B

Bar displax, 225

Button, 113, 278

C

Call menus, 106

CANHEAD, connect, 79

Channel selection in measuring mode, 108

Channel selection in setting mode, 109

Communication card ML74B, 80

Compression factor, 255

Conditions at the place of installation, 28

Confirmation prompt, 109

Connect transducer, 42, 186
- DC current sources, 67
- DC voltage sources, 60
- Distributor board VT810/815, 77
- Frequency generators, 70, 71
- Inductive full bridge, 44, 45, 48, 49
- Inductive half bridge, 46
- LVDT, 47
- Piezoelectric transducers, 74
- Piezoresistive transducers, 75
- Potentiometric transducers, 76
- Pulse generators, 72, 73
- Resistors, Pt 100, 69
- SG full bridge circuit, 44, 45
- SG half bridge circuit, 46
- SG single strain gage, 50, 51, 52
- Thermocouples, 59
- Torque flange, T10 serie, T12/T12HP, T40 serie, 55
- Torque shaft, T4A, T5, TB1A, 58

Connection board
- AP01i... AP17, 84
- AP74, 81
- AP77, 89

D

Data acquisition, 100, 207, 225
Data acquisition comments, 225
Data acquisition parameters, 246, 252, 253, 254, 255, 259, 260, 281, 282
Data acquisition program, 248
Data storage, 109
DC current source, connect, 67
DC voltage source, connect, 60
Device layout, 19
Dialog boxes, 110
Direct input, 108
Distributor board VT810/815i, connect, 77
Documentation, 16

E

Edit field, 110, 112, 278
Entry, Letters and numbers, 112
Error messages, 103
External triggering, 86, 250

F

Feedback lines, 41
File name , 225
Filters
  High pass, 124
  Low pass, 124
Four-wire configuration, 58
Frequency generator, connect, 70, 71
Frequency quadrupling, 170

G

Glitch filter, 151, 170
Grounding switch, 31
Guides, 16

H

Housing, MGCplus, 20
Hysteresis, 190

I

Image no., 210
Image type, 210
Inductive full bridge, connect, 44
Inductive half bridge, connect, 46, 48, 49
Inputs and outputs, 82, 84, 90, 92
Integration, 186, 199

L

Level, 251
Limit value, Delay, 191
Limit values, 188
LVDT, connect, 47

M

Mains connection, Desktop housing, 31
Maintenance and cleaning, 29
Measured value band, 249
Measuring
  pulses/frequencies, 167 - 170
  Torque transducers, 145

Measuring with
Inductive transducers, 139 - 144
piezoresistive transducers, 172 - 178
Strain gages, 134 - 138
Measurment periods, 243
Menu, Pull-up menu, 106
Menu structure, 277
Menus, exit, 107
Mode, 248, 251
Mounting the communication processor CP52, 24

P

Parameter set, 204
Peak-value memory, 196
"Envelope curve" operating mode, 201
"Instantaneous value" operating mode, 200
"Peak value" operating mode, 199
adjust, 196
combine, 197
control, 199
Periods, 225
Piezoelectric transducers, connect, 74
Piezoresistive transducers, 175
connect, 75
Pin assignment, AP01i...AP17, 85
Polynomial characteristic curve, Cubic, 119
Potentiometric transducers, 179
connect, 76
Pre-trigger, 252
Pulse generators, connect, 72, 73

R

Recording comments, 254 - 258
Recording file, 253
Recording format, 254 - 258
Recording parameter set, 259
Recording parameters, 260
Recording program, 246
Recording series of tests, 242
Remote controls, 82
Assignment AP01i...AP17, 86
Factory settings, 86
Function, 185
Resistors, 165
Resistors, Pt 100, connect, 69
Rotational speed measurement, T10 serie, T12/T12HP, T40 serie, 56, 57

S

Safety instructions, 9
Residual dangers, 9
Sampling rate trigger, 247
Selection field, 110, 278
Selection levels, 110
Setup window, 110
SG
Full bridge circuit, connect, 44, 45, 48, 49
Half bridge circuit, connect, 46
Single strain gage, connect, 50, 51, 52
Transducer, connect, 42
Shielding design, 39
Signal conditioning, 122
Start condition, 252
Start-Trigger, 246
Status line, 101, 211

Stop condition, 253
Stop-Trigger, 246
Synchronization, 32, 37, 38
System, Language, 275
System description, 17

T

TEDS transducer, 120
Thermocouples, connect, 59
Time channel, 245
Torque flange T10 serie, T12/T12HP, T40 series, 55
Torque measurement
  T10 serie, T12/T12HP, T40 series, 55
  T4A, T5, TB1A (slip rings or direct cable connection), 58
Torque transducers, 145
Transducer error, 170
Trigger, External , 250
Trigger condition, 246
Trigger define, 247
Trigger function, 246
Trigger level, 251
Triggerbedingung, 251

X

x-y realization, 222

Z

Zero index, 170

A00534 31 E00 08 7-2002.0612

HBK - Hottinger Brüel & Kjaer
www.hbkworld.com
info@hbkworld.com